DUPROLUX®
LIGHTING

LED Indoor Lighting

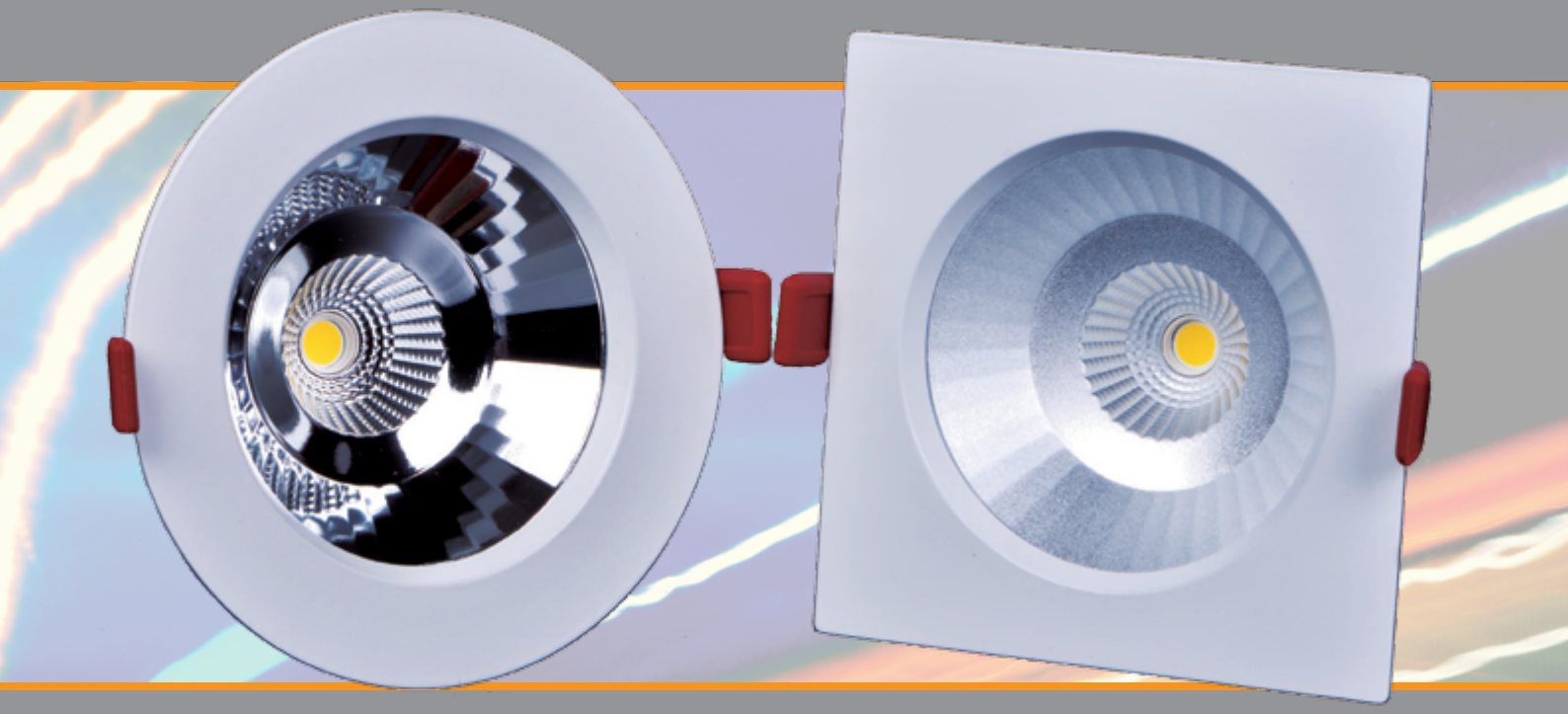

MERKUR®
GERMAN TECHNOLOGY

DUPROLUX® Lighting

Ulrich Scheller
Export Manager

For over 100 years – since the time of Werner von Siemens – German Technology is renown for outstanding innovation and technical leadership. **MERKUR®** Ueberseehandel GmbH is committed to this long tradition.

Under **MERKUR®** German Technology we develop and produce warranted , durable high quality products in the following segments:

- Electrotechnology
- **DUPROLUX®** Lighting
- Metering
- Power Distribution
- Climatisation
- Renewable Energy

MERKUR® clients worldwide can rely on our vast experience. We offer authorised distributors competitive prices better allowing them to compete in the market. We also successfully cooperate with contractors who are bidding for public utility tenders.

MERKUR® is a reliable partner with a tradition of providing individually tailored products and solutions in accordance with customers' needs. Contact us and we gladly assist you with more details about our products and services. Get in touch with us!

Export Manager

DUPROLUX®
LIGHTING

www.merkur-hamburg.de

MERKUR LED DOWN LIGHT SYNJET

- CREE Xlamp CXA COB LED

Applications

- provide for air intake and for exhaust create syntheticjets Figure4 illustrates air flow through the SLC and the heat sink. In addition to the flow that is directly created by the SLCjet nozzles (green arrows), air is also entrai-ned (blue arrows) due to the phenomenon known as the jet ejector effect. This is the same effect feit when a I arge vehicle passes by and air rushes in to follow it. The entrained air adds to the overall flow generated bythe SLC The SLCjets multiply the air flow into the heat sink channels.

This increases the amount of cool air mixing with the hot air next to the fin surfaces that has been disturbed by the syntheticjet turbulent pulse. The hot air (red arrows) flows out ofthe luminaire and mixes with the room air.

- The SLC nozzles:

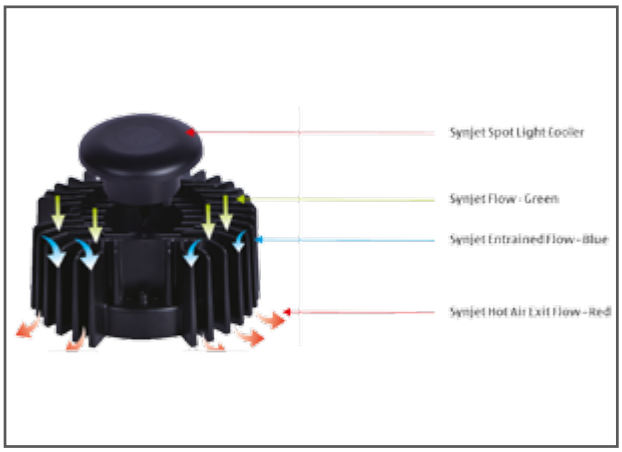

Applications

- Special Technology: Synjet Spotlight Cooler(SLC) Synjet Spotlight Cooler (SLC) is a patented, highly adaptable, quiet, active cooling solution for the solid state lighting industry. The SLC's flexible design is ideal for an extensicve range of lighting options from recessed to track and is capable of cooling 40-80 watts. For additional adaptability. the synjet can be adjusted to vaarious cooling levels dependent upon thermal needs. The spotlight cooler form factor is extremely versatile, adept in building a broad product line for com-mercial applications.

- Thermal Design

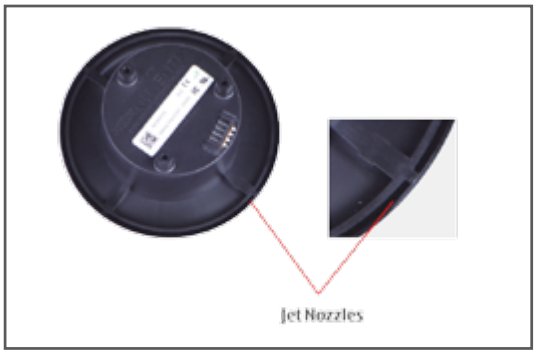

Applications

- The SLC generatesturbulent pulses of air which efficiently dissipate heatfrom anysurface. The LEDs are mounted on the face of the heat sinkand the heat spreads to the fins where the turbulent pulses along with the entrained air flow created by the Synjet Spot light Cooler dissipate the heat to the surrounding air.

The SLC comes with a standard heat sinkand its design has been tested and qualified.

Synjet Spot Light Cooler Airflow

SLCairflow is generated from a ring of reetangular nozzles that are directed at the channels between the heat sink fins shown in the following figure

MERKUR LED DOWN LIGHT iMax80

- CREE Xlamp CXA COB LED

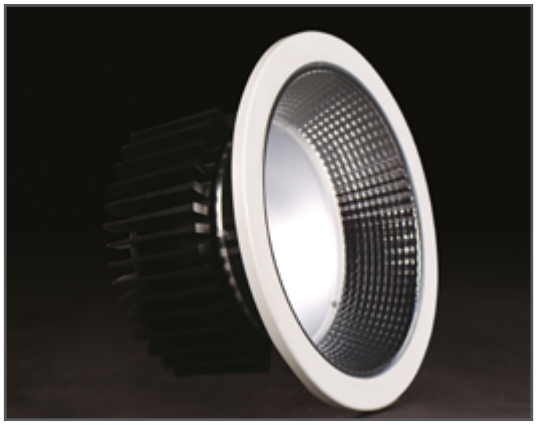

Applications

- Die-cast aluminium recessed fixture of a size to give optimal passive heat dissipation ofthe LED ARRAY. Includes high-power aluminium optic with facets, newly designed to obtain a uniform distribution for maximum comfort.
Includes extra-clear transparent screen.
Suitable for rooms.Ip44.

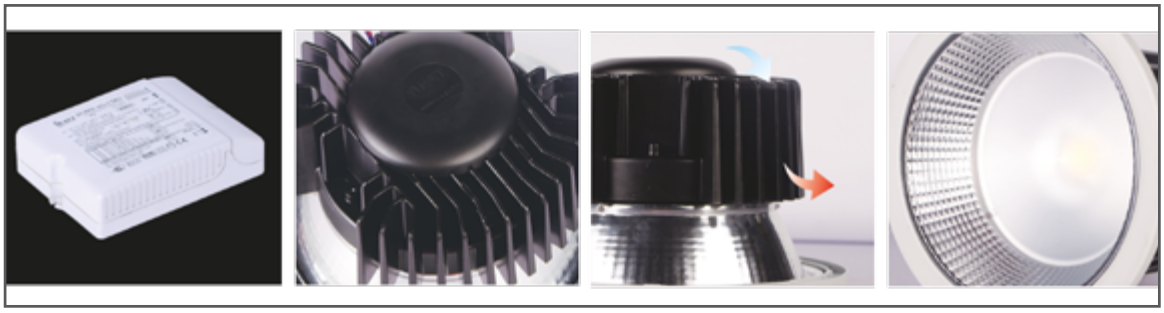

DUPROLUX® LIGHTING

www.merkur-hamburg.de

MERKUR LED DOWN LIGHT iMAX80-1

- CREE

Applications

- Recessed Luminairs LED Downlight
- High efficiency facets aluminium reflectors
- Narrow/wide Beam Angle
- Die-cast aluminum mounting ring,with system to fix it to the false ceiling using steel springs
- Die-cast heat sink with passive cooling
- black, grey, white

Product Code	GH-DL3000-W30H	GH-DL3000-W30	GH-DL3000-W40	GH-DL3000-W50
Power(W)	40	40	40	40
Voltage(V)	100-240	100-240	100-240	100-240
DC(mA)	2000	2000	2000	2000
CCT(K)	3000	3000	3000	3000
CRI	90	80	80	80
Beam Angle(°)	50/105	50/105	50/105	50/105
Hot Lumen(lm)	2750	3050	3300	3350
Power Factor	>0.95	>0.95	>0.95	>0.95
Rated Life(°C)	-30~40	-30~40	-30~40	-30~40
CTN(PCS)	8	8	8	8

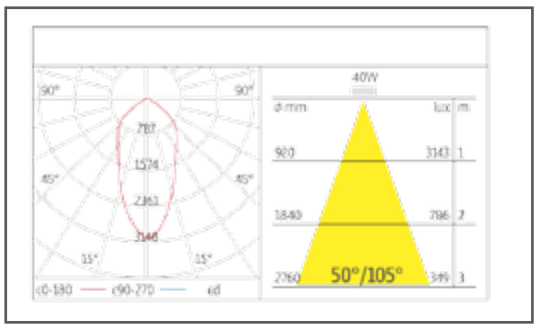

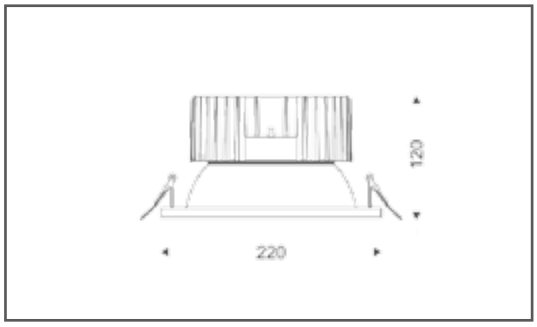

- ϕ210mm (cut out)

MERKUR LED DOWN LIGHT iMAX80-2

- CREE

Applications

- Recessed Luminairs LED Downlight
- High efficiency facets aluminium reflectors
- Narrow/wide Beam Angle
- Die-cast aluminum mounting ring,with system to fix it to the false ceiling using steel springs
- Die-cast heat sink with passive cooling
- black, grey, white

Product Code	GH-DL4000-W30H	GH-DL4000-W30	GH-DL4000-W40	GM-DL4000-W50
Power(W)	60	60	60	60
Voltage(V)	100-240	100-240	100-240	100-240
DC(mA)	1400	1400	1400	1400
CCT(K)	3000	3000	4000	5000
CRI	90	80	80	80
Beam Angle(°)	50/105	50/105	50/105	50/105
Hot Lumen(lm)	4050	4300	4450	4450
Power Factor	>0.95	>0.95	>0.95	>0.95
Rated Life(°C)	-30~40	-30~40	-30~40	-30~40
CTN(PCS)	8	8	8	8

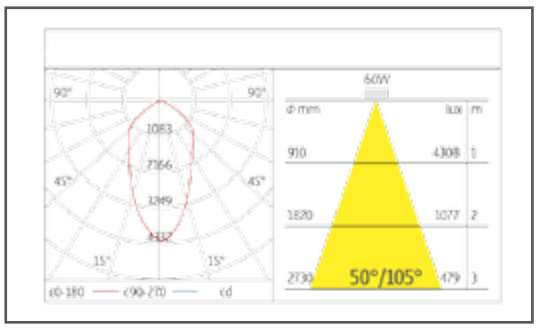

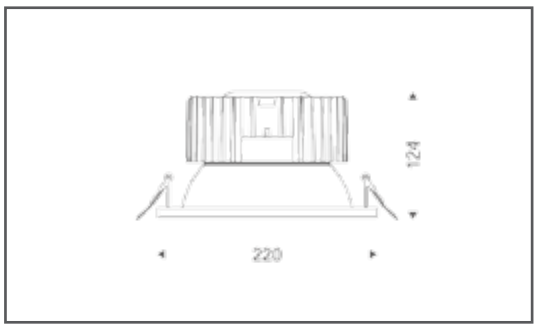

- ϕ210mm (cut out)

MERKUR LED DOWN LIGHT iMAX80-3

- CREE

Applications

- Recessed Luminairs LED Downlight
- High efficiency facets aluminium reflectors
- Narrow/wide Beam Angle
- Die-cast aluminum mounting ring,with system to fix it to the false ceiling using steel springs
- Die-cast heat sink with passive cooling
- black, grey, white
- b

Product Code	GM-DLS000-W30H	GM-DL5000-W30	GM-DL5000-W40	GM-DL5000-W50
Power(W)	65	65	65	65
Voltage(V)	100-240	100-240	100-240	100-240
DC(mA)	1500	1500	1500	1500
CCT(K)	3000	3000	4000	5000
CRI	90	80	80	80
Beam Angle(°)	50/105	50/105	50/105	50/105
Hot Lumen(lm)	5050	5200	5350	5450
Power Factor	>0.95	>0.95	>0.95	>0.95
Rated Life(°C)	-30~40	-30~40	-30~40	-30~40
CTN(PCS)	8	8	8	8

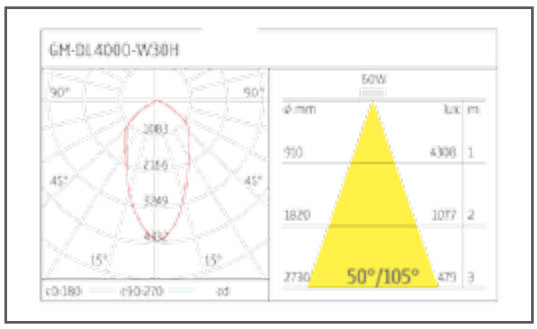

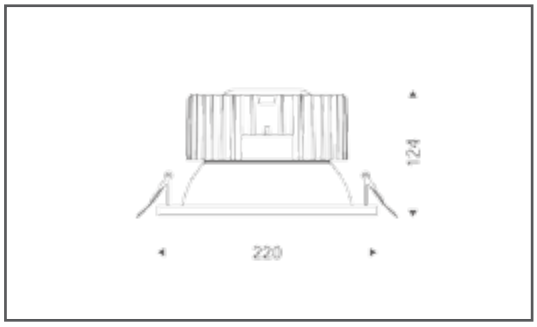

- ϕ210mm (cut out)

MERKUR LED DOWN LIGHT iMAX90

- CREE

Applications

- Recessed Luminairs LED Downlight
- High efficiency facets aluminium reflectors
- Narrow/wide Beam Angle
- Die-cast aluminum mounting ring,with system to fix it to the false ceiling using steel springs
- Die-cast heat sink with passive cooling
- black, grey, white
- IP44

Product Code	GM-DL3000HCRI-W30	GM-DL3000HCRI-N40
Power(W)	40	40
Voltage(V)	100-240	100-240
DC(mA)	1400	1400
CCT(K)	3000	4000
CRI	90	90
Beam Angle(°)	50/85	50/85
Hot Lumen(lm)	2250	2450
Power Factor	>0.95	>0.95
Rated Life(°C)	-30~40	-30~40
CTN(PCS)	8	8

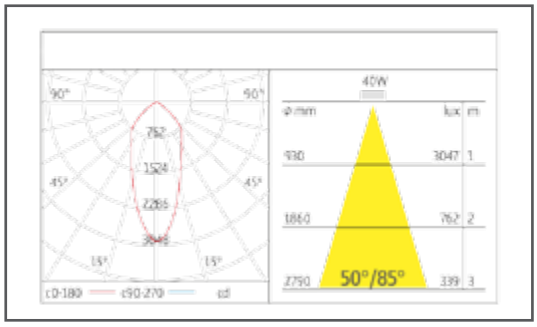

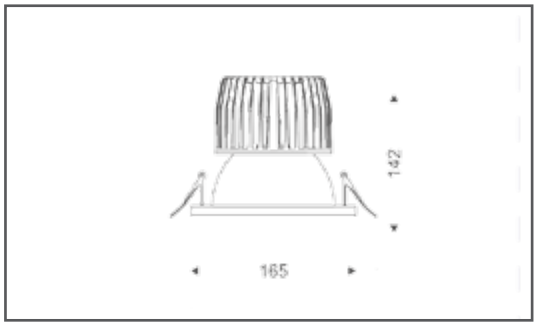

- ϕ150mm (cut out)

MERKUR LED DOWN LIGHT iMAX90-2

- CREE

Applications

- Recessed Luminairs LED Downlight
- High efficiency facets aluminium reflectors
- Narrow/wide Beam Angle
- Die-cast aluminum mounting ring,with system to fix it to the false ceiling using steel springs
- Die-cast heat sink with passive cooling
- black, grey, white
- IP44

Product Code	GM-DL3000HCRI-W30	GM-DL3000HCRI-N40
Power(W)	65	65
Voltage(V)	100-240	100-240
DC(mA)	1500	1500
CCT(K)	3000	4000
CRI	90	90
Beam Angle(°)	50/85	50/85
Hot Lumen(lm)	4000	4300
Power Factor	>0.95	>0.95
Rated Life(°C)	-30~40	-30~40
CTN(PCS)	8	8

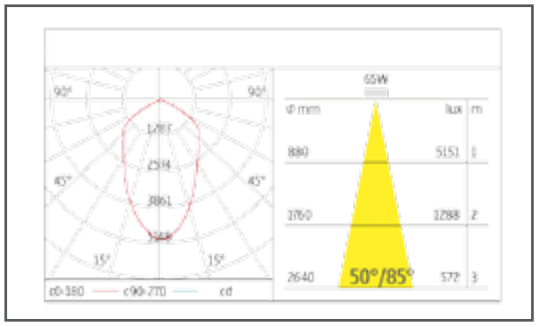

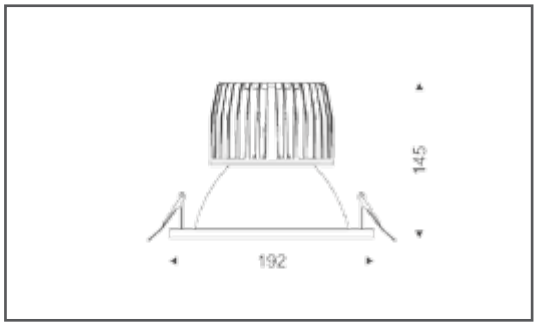

- ϕ180mm (cut out)

MERKUR LED DOWN LIGHT CRIS

- CREE Xlamp CXA COB LED

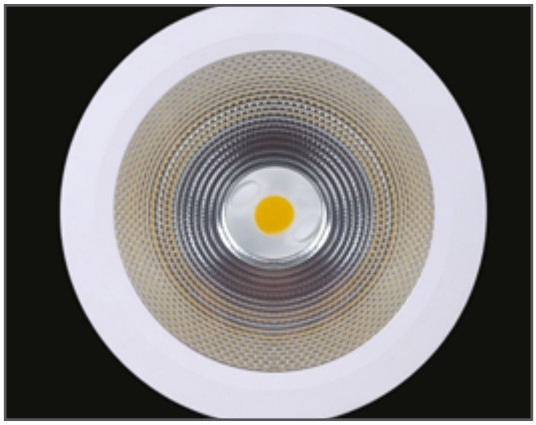

Applications

- Die-cast aluminium recessed fixture of a size to give optimal passive heat dissipation of the LED ARRAY. Includes high-power aluminium optic with facets, newly designed to obtain a uniform distribution for maximum comfort.
Includes extra-clear transparent screen.
Suitable for rooms. Ip44.

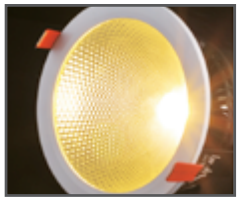

MERKUR LED DOWN LIGHT CRIS

- CREE

Applications

- Recessed Luminairs LED Downlight
- High efficiency facets aluminium reflectors
- Narrow / wide Beam Angle
- Die-cast aluminum mounting ring,with system to fix it to the false ceiling using steel springs
- Die-cast heat sink with passive cooling
- Luminaires are equipped with electronic driver

or with dimmable electronic driver on request

- IP44

Product Code	GM-CR400(G)-W30	GM-CR400(G)-N40	GM-CR400(G)-C50
Power(W)	15	15	15
Voltage(V)	100-240	100-240	100-240
DC(mA)	350	350	350
CCT(K)	3000	4000	5000
CRI	90	80	80
Beam Angle(°)	43/89	43/89	43/89
Hot Lumen(lm)	1060	1090	1220
Power Factor	>0.95	>0.95	>0.95
Rated Life(°C)	-30~40	-30~40	-30~40
CTN(PCS)	12	12	12

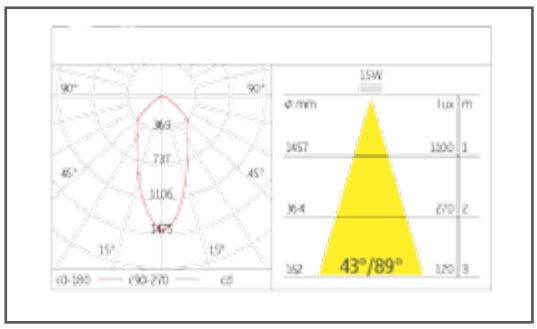

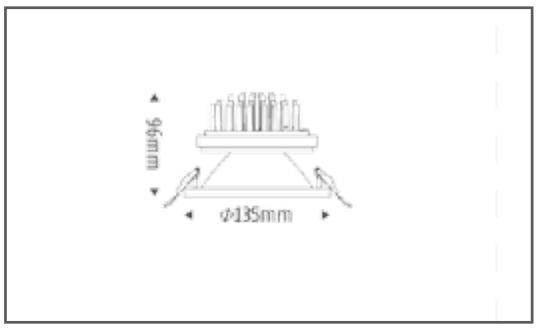

- ϕ125mm (cut out)

MERKUR LED DOWN LIGHT CRIS-2

- CREE

Applications

- Recessed Luminairs LED Downlight
- High efficiency facets aluminium reflectors
- Narrow / wide Beam Angle
- Die-cast aluminum mounting ring,with system to fix it to the false ceiling using steel springs
- Die-cast heat sink with passive cooling
- Luminaires are equipped with electronic driver

or with dimmable electronic driver on request

- IP44

Product Code	GM-CR800(G)-W30	GM-CR800(G)-N40	GM-CR800(G)-C50
Power(W)	25	25	25
Voltage(V)	100-240	100-240	100-240
DC(mA)	600	600	600
CCT(K)	3000	4000	5000
CRI	80	80	80
Beam Angle(°)	24/77	24/77	24/77
Hot Lumen(lm)	17100	1830	1840
Power Factor	>0.95	>0.95	>0.95
Rated Life(°C)	-30~40	-30~40	-30~40
CTN(PCS)	12	12	12

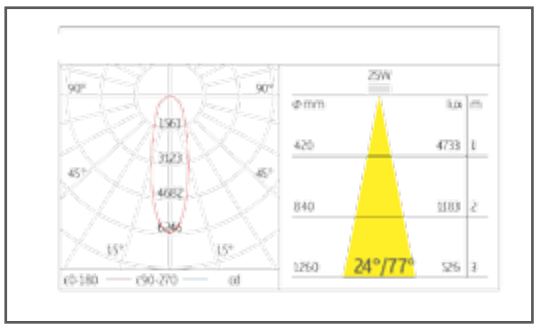

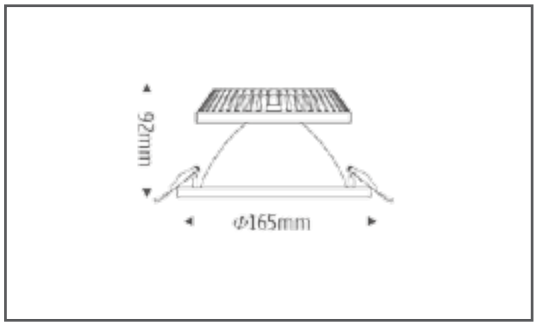

- ϕ150mm (cut out)

MERKUR LED DOWN LIGHT CRIS-3

- CREE

Applications

- Recessed Luminairs LED Downlight
- High efficiency facets aluminium reflectors
- Narrow Beam Angle
- Die-cast aluminum mounting ring,with system to fix it to the false ceiling using steel springs
- Die-cast heat sink with passive cooling
- IP44

Product Code	GM-CR1200(G)-W30	GM-CR1200(G)-N40	GM-CR1200(G)-C50
Power(W)	30	30	30
Voltage(V)	100-240	100-240	100-240
DC(mA)	600	600	600
CCT(K)	3000	4000	5000
CRI	80	80	80
Beam Angle(°)	24/85	24/85	24/85
Hot Lumen(lm)	2140	2220	2280
Power Factor	>0.95	>0.95	>0.95
Rated Life(°C)	-30~40	-30~40	-30~40
CTN(PCS)	12	12	12

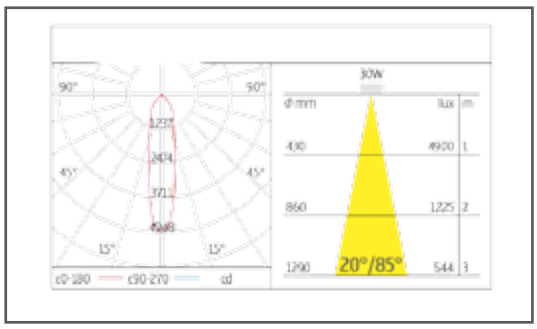

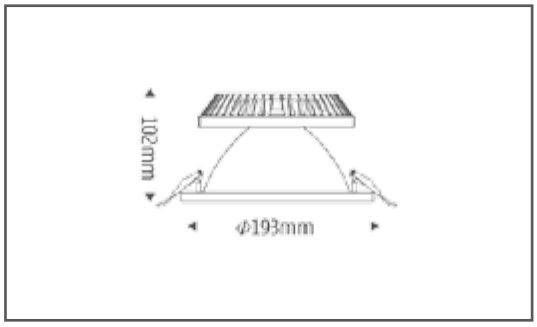

- ϕ180mm (cut out)

MERKUR LED DOWN LIGHT CRIS-3

- CREE

Applications

- Recessed Luminairs LED Downlight
- High efficiency facets aluminium reflectors
- Narrow Beam Angle
- Die-cast aluminum mounting ring,with system to fix it to the false ceiling using steel springs
- Die-cast heat sink with passive cooling
- IP44

Product Code	GM-CR2000(G)-W30	GM-CR2000(G)-W30	GM-CR2000(G)-W30
Power(W)	35	35	35
Voltage(V)	100-240	100-240	100-240
DC(mA)	840	840	840
CCT(K)	3000	4000	5000
CRI	80	80	80
Beam Angle(°)	25/85	25/85	25/85
Hot Lumen(lm)	2850	2910	2970
Power Factor	>0.95	>0.95	>0.95
Rated Life(°C)	-30~40	-30~40	-30~40
CTN(PCS)	8	8	8

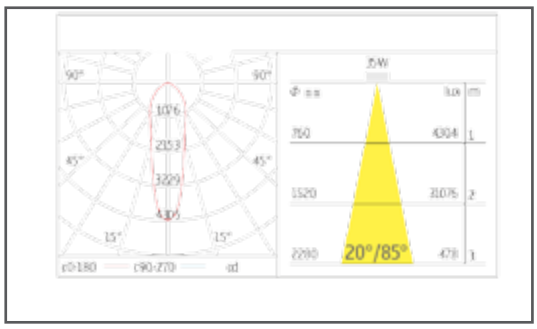

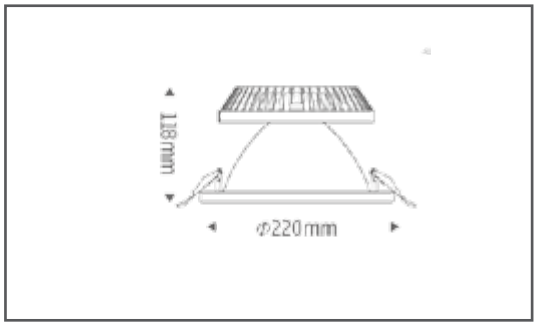

- ϕ205mm (cut out)

MERKUR LED DOWN LIGHT CRIS

- CREE Xlamp CXA COB LED

Applications

- Professional recessed fixture for high-power LED ARRAY consisting of die-cast aluminium finned heat dissipation system.
- Another secondary aluminium optic guarantees maximum visual comfort, through out the new developed fresnel lens with a distinct optical design technology that more efficiently reproduces the lighting properties of the COB design. Die-cast aluminium ring with system to fix it to the false ceiling using steel springs..

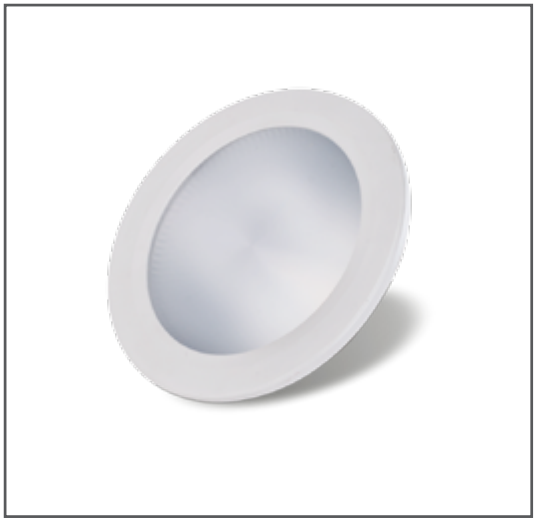

MERKUR LED DOWN LIGHT CRIS-4

- CREE

Applications

- Recessed Luminairs LED Downlight
- High efficiency facets aluminium reflectors
- Fresnel lens
- Die-cast aluminum mounting ring,with system to fix it to the false ceiling using steel springs
- Die-cast heat sink with passive cooling
- Luminaires are equipped with electronic driver or with dimmable electronic driver on request
- IP44

Product Code	GM-CR400(PC)-W30	GM-CR400(PC)-N40	GM-CR400(PC)-C50
Power(W)	15	15	15
Voltage(V)	100-240	100-240	100-240
DC(mA)	350	350	350
CCT(K)	3000	4000	5000
CRI	80	80	80
Beam Angle(°)	38/89	38/89	38/89
Hot Lumen(lm)	1030	1070	1160
Power Factor	>0.5	>0.5	>0.5
Rated Life(°C)	-30~40	-30~40	-30~40
CTN(PCS)	12	12	12

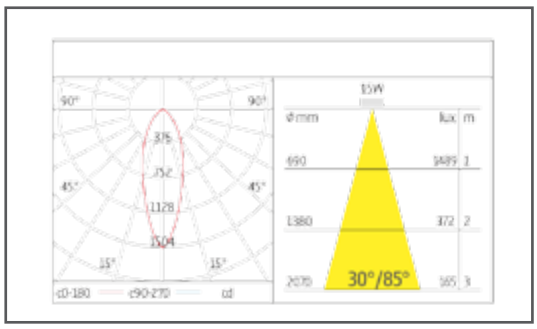

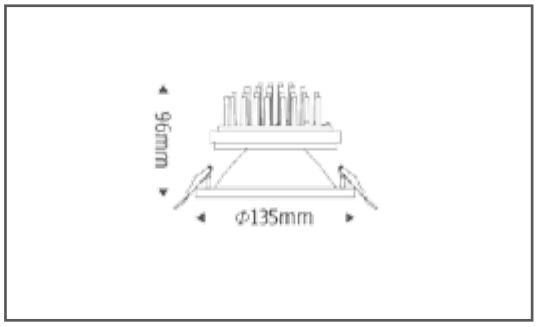

- ϕ125mm (cut out)

MERKUR LED DOWN LIGHT CRIS-5

- CREE

Applications

- Recessed Luminairs LED Downlight
- High efficiency facets aluminium reflectors
- Fresnel lens
- Die-cast aluminum mounting ring,with system to fix it to the false ceiling using steel springs
- Die-cast heat sink with passive cooling
- Luminaires are equipped with electronic driver or with dimmable electronic driver on request
- IP44

Product Code	GM-CR800(PC)-W30	GM-CR800(PC)-N40	GM-CR800(PC)-C50
Power(W)	25	25	25
Voltage(V)	100-240	100-240	100-240
DC(mA)	600	600	600
CCT(K)	3000	4000	5000
CRI	80	80	80
Beam Angle(°)	31/78	31/78	31/78
Hot Lumen(lm)	1650	1770	1840
Power Factor	>0.95	>0.95	>0.95
Rated Life(°C)	-30~40	-30~40	-30~40
CTN(PCS)	12	12	12

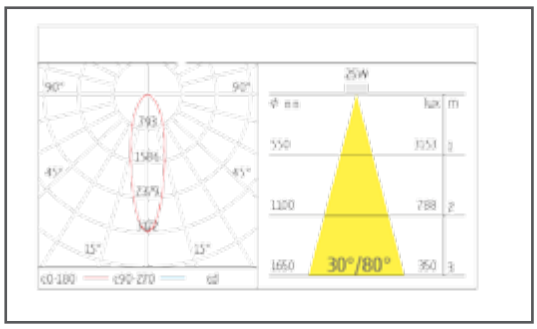

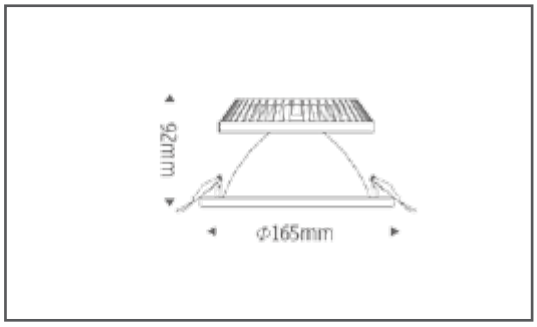

- ϕ150mm (cut out)

MERKUR LED DOWN LIGHT CRIS-6

- CREE

Applications

- Recessed Luminairs LED Downlight
- High efficiency facets aluminium reflectors
- Fresnel lens
- Die-cast aluminum mounting ring,with system to fix it to the false ceiling using steel springs
- Die-cast heat sink with passive cooling
- Luminaires are equipped with electronic driver or with dimmable electronic driver on request
- IP44

Product Code	GM-CR1200(PC)-W30	GM-CR1200(PC)-N40	GM-CR1200(PC)-C50
Power(W)	30	30	30
Voltage(V)	100-240	100-240	100-240
DC(mA)	700	700	700
CCT(K)	3000	4000	5000
CRI	80	80	80
Beam Angle(°)	35/87	35/87	35/87
Hot Lumen(lm)	2030	2080	2120
Power Factor	>0.95	>0.95	>0.95
Rated Life(°C)	-30~40	-30~40	-30~40
CTN(PCS)	12	12	12

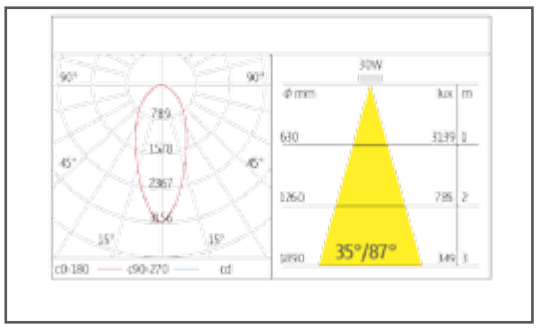

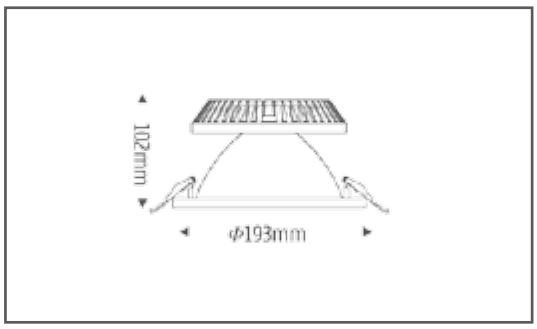

- ϕ180mm (cut out)

MERKUR LED DOWN LIGHT CRIS-7

- CREE

Applications

- Recessed Luminairs LED Downlight
- High efficiency facets aluminium reflectors
- Fresnel lens
- Die-cast aluminum mounting ring,with system to fix it to the false ceiling using steel springs
- Die-cast heat sink with passive cooling
- Luminaires are equipped with electronic driver or with dimmable electronic driver on request
- IP44

Product Code	GM-CR2000(PC)-W30	GM-CR2000(PC)-N40	GM-CR2000(PC)-C50
Power(W)	35	35	35
Voltage(V)	100-240	100-240	100-240
DC(mA)	840	840	840
CCT(K)	3000	4000	5000
CRI	80	80	80
Beam Angle(°)	47/122	47/122	47/122
Hot Lumen(lm)	2690	2750	2760
Power Factor	>0.95	>0.95	>0.95
Rated Life(°C)	-30~40	-30~40	-30~40
CTN(PCS)	8	8	8

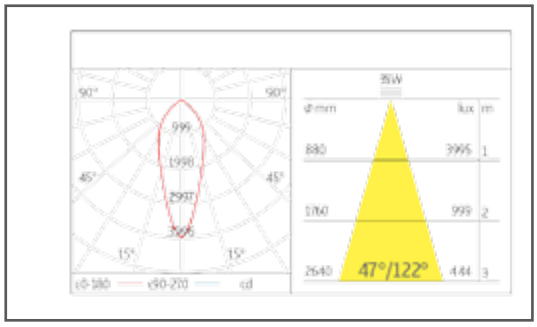

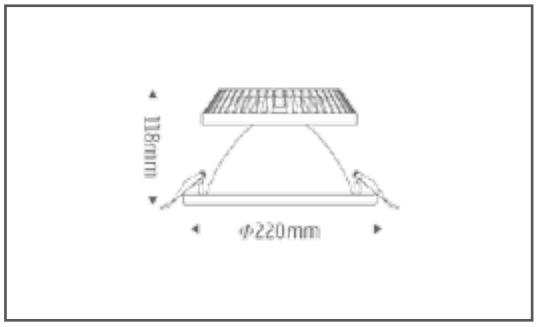

- ϕ205mm (cut out)

MERKUR LED DOWN LIGHT CRIS SERIES

- CREE Xlamp CXA COB LED

Applications

- One glare cut-off type angles with glare cut-off angle at 20 degree. Simply choose this type best suited to your interior requirements.

MERKUR LED DOWN LIGHT CRIS SERIES 1

- CREE

Applications

- Recessed Luminairs LED Downlight
- High efficiency facets aluminium reflectors
- Fresnel lens
- Die-cast aluminum mounting ring,with system to fix it to the false ceiling using steel springs
- Die-cast heat sink with passive cooling
- Luminaires are equipped with electronic driver or with dimmable electronic driver on request
- IP44

Product Code	GM-CR400DR-W30	GM-CR400DR-N40	GM-CR400DR-C50
Power(W)	15	15	15
Voltage(V)	100-240	100-240	100-240
DC(mA)	350	350	350
CCT(K)	3000	4000	5000
CRI	80	80	80
Beam Angle(°)	50/97	50/97	50/97
Hot Lumen(lm)	1020	1150	1170
Power Factor	>0.5	>0.5	>0.5
Rated Life(°C)	-30~40	-30~40	-30~40
CTN(PCS)	12	12	12

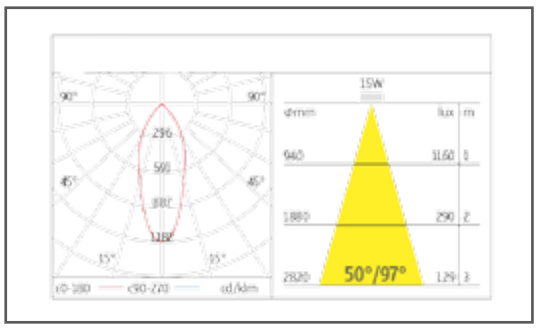

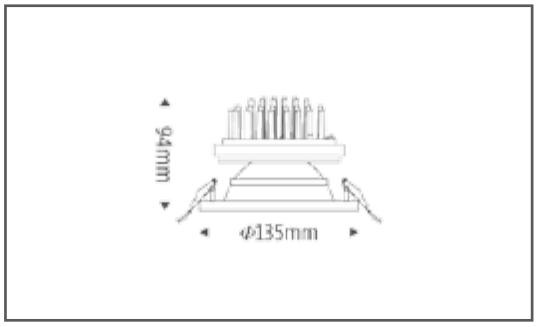

- ϕ125mm (cut out)

MERKUR LED DOWN LIGHT CRIS SERIES 2

- CREE

Applications

- Recessed Luminairs LED Downlight
- High efficiency facets aluminium reflectors
- Fresnel lens
- Die-cast aluminum mounting ring,with system to fix it to the false ceiling using steel springs
- Die-cast heat sink with passive cooling
- Luminaires are equipped with electronic driver or with dimmable electronic driver on request
- IP44

Product Code	GM-CR800DR-W30	GM-CR800DR-N40	GM-CR800DR-C50
Power(W)	25	25	25
Voltage(V)	100-240	100-240	100-240
DC(mA)	500	500	500
CCT(K)	3000	4000	5000
CRI	80	80	80
Beam Angle(°)	48/92	48/92	48/92
Hot Lumen(lm)	1660	1770	1780
Power Factor	>0.95	>0.95	>0.95
Rated Life(°C)	-30~40	-30~40	-30~40
CTN(PCS)	12	12	12

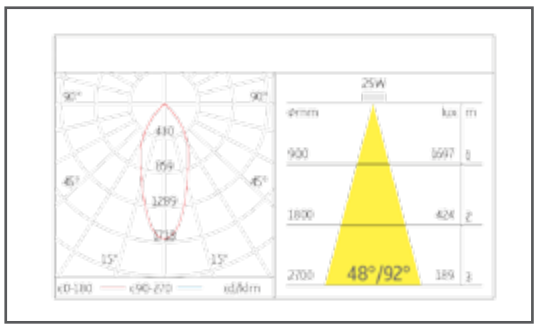

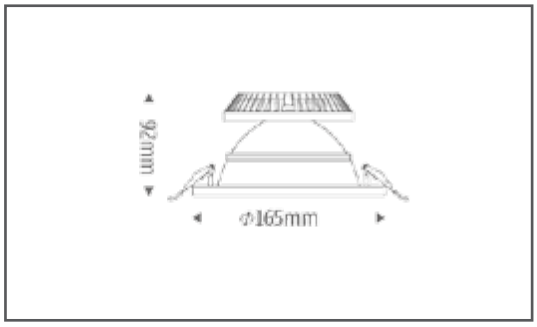

- ϕ150mm (cut out)

MERKUR LED DOWN LIGHT CRIS SERIES 3

- CREE

Applications

- Recessed Luminairs LED Downlight
- High efficiency facets aluminium reflectors
- Fresnel lens
- Die-cast aluminum mounting ring,with system to fix it to the false ceiling using steel springs
- Die-cast heat sink with passive cooling
- Luminaires are equipped with electronic driver or with dimmable electronic driver on request
- IP44

Product Code	GM-CR1200DR-W30	GM-CR1200DR-N40	GM-CR1200DR-C50
Power(W)	30	30	30
Voltage(V)	100-240	100-240	100-240
DC(mA)	700	700	700
CCT(K)	3000	4000	5000
CRI	80	80	80
Beam Angle(°)	42/93	42/93	42/93
Hot Lumen(lm)	2150	2280	2320
Power Factor	>0.95	>0.95	>0.95
Rated Life(°C)	-30~40	-30~40	-30~40
CTN(PCS)	12	12	12

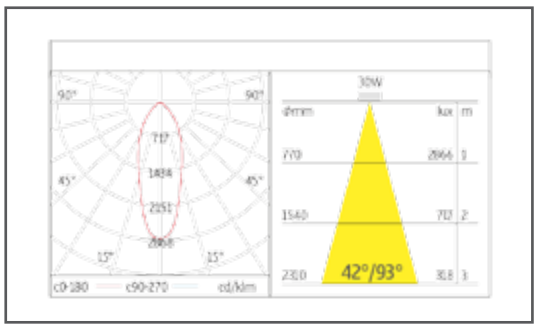

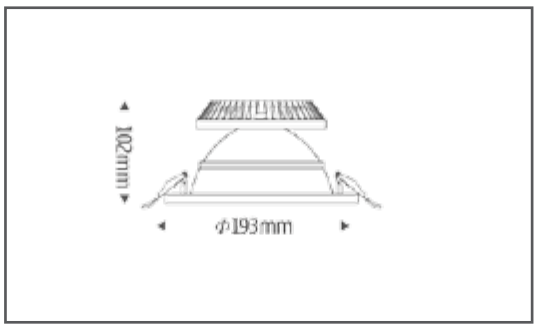

- ϕ180mm (cut out)

MERKUR LED DOWN LIGHT CRIS SERIES 4

- CREE

Applications

- Recessed Luminairs LED Downlight
- High efficiency facets aluminium reflectors
- Fresnel lens
- Die-cast aluminum mounting ring,with system to fix it to the false ceiling using steel springs
- Die-cast heat sink with passive cooling
- Luminaires are equipped with electronic driver or with dimmable electronic driver on request
- IP44

Product Code	GM-CR2000DR-W30	GM-CR2000DR-N40	GM-CR2000DR-C50
Power(W)	35	35	35
Voltage(V)	100-240	100-240	100-240
DC(mA)	840	840	840
CCT(K)	3000	4000	5000
CRI	80	80	80
Beam Angle(°)	31/84	31/84	31/84
Hot Lumen(lm)	2840	2880	2910
Power Factor	>0.95	>0.95	>0.95
Rated Life(°C)	-30~40	-30~40	-30~40
CTN(PCS)	8	8	8

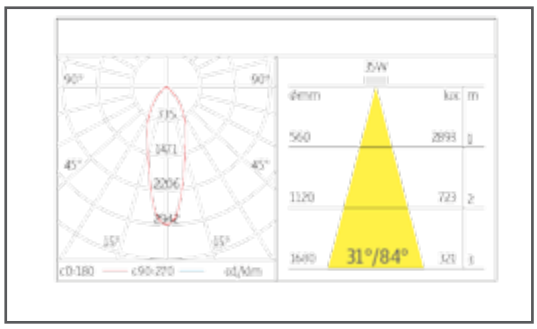

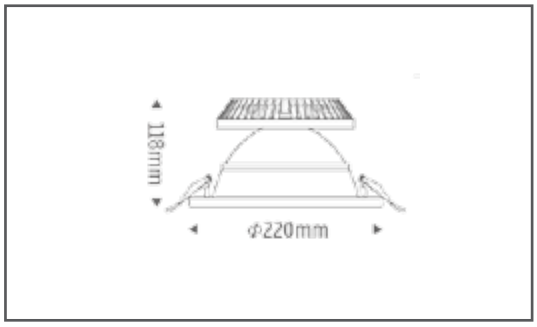

- ϕ205mm (cut out)

MERKUR LED DOWN LIGHT CRIS SQ

- CREE Xlamp CXA COB LED

Applications

- A stylish design of square ring with round cut out for easy installations.
- With high efficiency aluminium reflectors optic with facets, newly designed to obtain a uniform distribution for maximum visual comfort.
- The heat sink is made of aluminium die-cast For recessed fixture of a size to give optimal passive heat dissipation of the LED ARRAY.

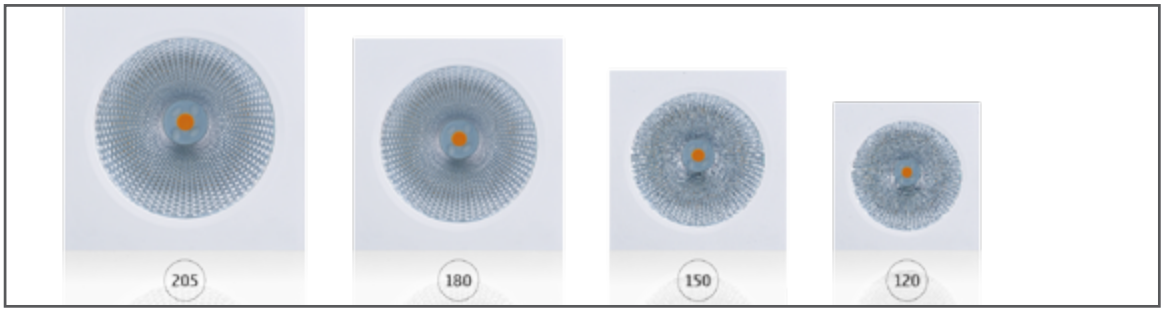

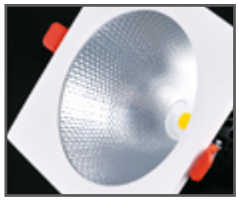

MERKUR LED DOWN LIGHT CRIS SQ 1

- CREE

Applications

- Recessed Luminairs LED Downlight
- High efficiency facets aluminium reflectors
- Fresnel lens
- Die-castaluminum mounting ring,with system to fix it to the false ceiling using steel springs
- Die-cast heat sink with passive cooling
- Luminaires are equiped with electronic driver or with dimmable electronic driver on request
- With round cut off
- IP44

Product Code	GM-CR400(G)S-W30	GM-CR400(G)S-N40	GM-CR400(G)S-C50
Power(W)	15	15	15
Voltage(V)	100-240	100-240	100-240
DC(mA)	350	350	350
CCT(K)	3000	4000	5000
CRI	80	80	80
Beam Angle(°)	43/89	43/89	43/89
Hot Lumen(lm)	1060	1090	1220
Power Factor	>0.5	>0.5	>0.5
Rated Life(°C)	-30~40	-30~40	-30~40
CTN(PCS)	12	12	12

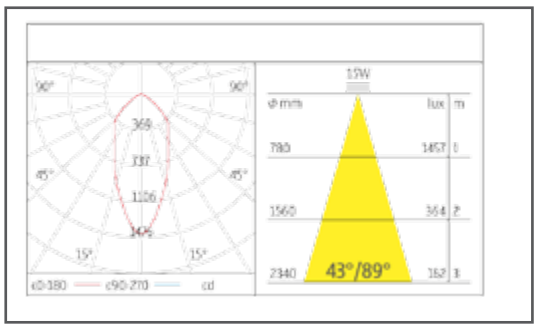

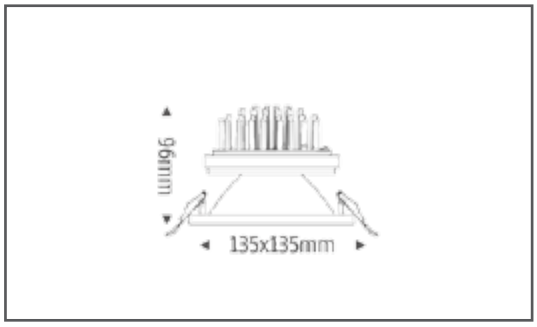

- ϕ125mm (cut out)

MERKUR LED DOWN LIGHT CRIS SQ 2

- CREE

Applications

- Recessed Luminairs LED Downlight
- High efficiency facets aluminium reflectors
- Narrow Beam Angle
- Die-castaluminum mounting ring,with system to fix it to the false ceiling using steel springs
- Die-cast heat sink with passive cooling
- Luminaires are equiped with electronic driver or with dimmable electronic driver on request
- With round cut off
- IP44

Product Code	GM-CRBOO(G)S-W30	GM-CRBOO(G)S-N40	GM-CRBOO(G)S-CSO
Power(W)	25	25	25
Voltage(V)	100-240	100-240	100-240
DC(mA)	600	600	600
CCT(K)	3000	4000	5000
CRI	80	80	80
Beam Angle(°)	24/77	24/77	24/77
Hot Lumen(lm)	1710	1830	1840
Power Factor	>0.95	>0.95	>0.95
Rated Life(°C)	-30~40	-30~40	-30~40
CTN(PCS)	12	12	12

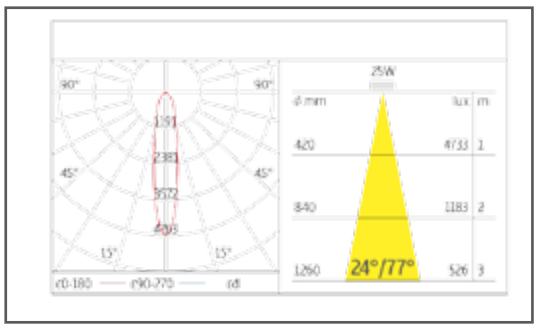

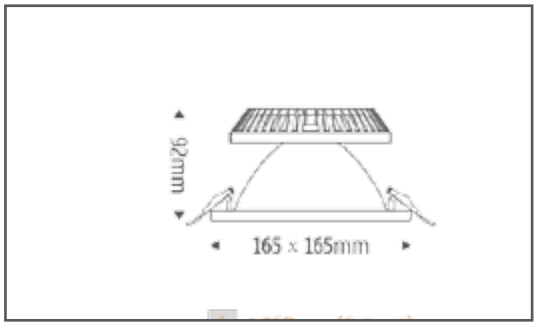

- ϕ150mm (cut out)

MERKUR LED DOWN LIGHT CRIS SQ 3

- CREE

Applications

- Recessed Luminairs LED Downlight
- High efficiency facets aluminium reflectors
- Narrow Beam Angle
- Die-castaluminum mounting ring,with system to fix it to the false ceiling using steel springs
- Die-cast heat sink with passive cooling
- With round cut off
- IP44

Product Code	GM-CR1200(G)S-W30	GM-CR1200(GS-N40	GM-CR1200(G)S-C50
Power(W)	30	30	30
Voltage(V)	100-240	100-240	100-240
DC(mA)	700	700	700
CCT(K)	3000	4000	5000
CRI	80	80	80
Beam Angle(°)	24/85	24/85	24/85
Hot Lumen(lm)	2140	2220	22280
Power Factor	>0.95	>0.95	>0.95
Rated Life(°C)	-30~40	-30~40	-30~40
CTN(PCS)	12	12	12

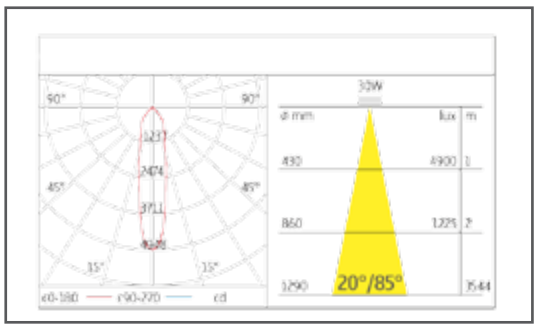

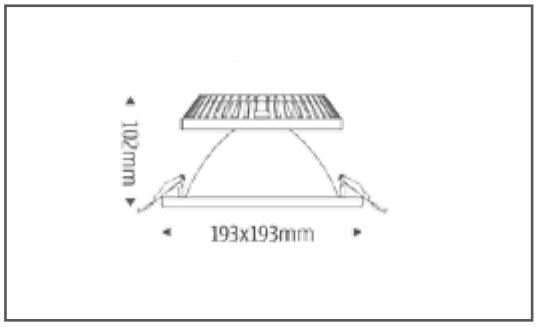

- ϕ180mm (cut out)

MERKUR LED DOWN LIGHT CRIS SQ 4

- CREE

Applications

- Recessed Luminairs LED Downlight
- High efficiency facets aluminium reflectors
- Narrow Beam Angle
- Die-castaluminum mounting ring,with system to fix it to the false ceiling using steel springs
- Die-cast heat sink with passive cooling
- With round cut off
- IP44

Product Code	GM-CR2000(G)S-W30	GM-CR2000(G)S-N40	GM-CR2000(G)S-CS0
Power(W)	35	35	35
Voltage(V)	100-240	100-240	100-240
DC(mA)	840	840	840
CCT(K)	3000	4000	5000
CRI	80	80	80
Beam Angle(°)	42/89	42/89	42/89
Hot Lumen(lm)	2850	2910	2970
Power Factor	>0.95	>0.95	>0.95
Rated Life(°C)	-30~40	-30~40	-30~40
CTN(PCS)	8	8	8

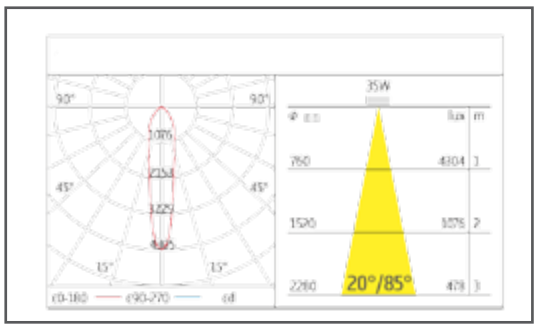

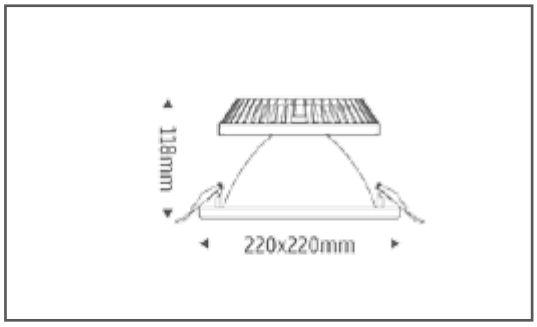

- ϕ205mm (cut out)

MERKUR LED DOWN LIGHT CRIS SQ

- CREE Xlamp CXA COB LED

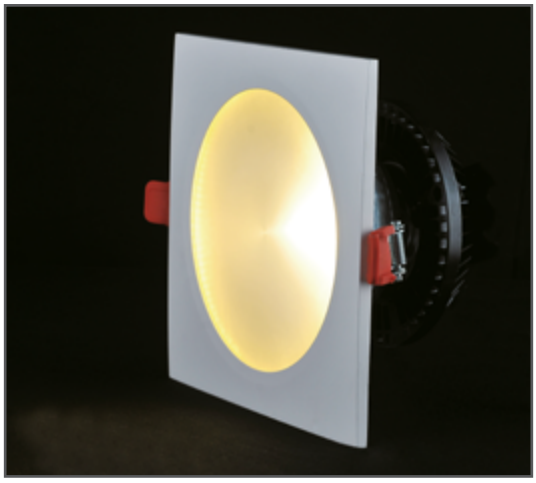

Applications

- Through out the new developed fresnel lens with a distinct optical design technology that more efficiently reproduces the lighting properties of the COB design.
- A stylish design of square ring with round cut out for easy installations.
- With high efficiency aluminium reflectors optic with facets, newly designed to obtain a uni form distribution for maximum visual comfort

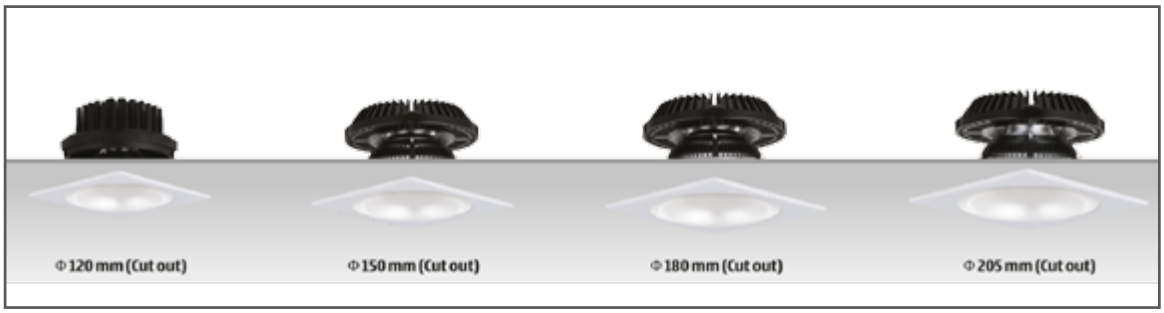

MERKUR LED DOWN LIGHT CRIS SQ 5

- CREE

Applications

- Recessed Luminairs LED Downlight
- High efficiency facets aluminium reflectors
- Fresnellens
- Die-cast aluminum mounting ring,with system to fix it to the false ceiling using steel springs
- Die-cast heat sink with passive cooling
- Luminaires are equiped with electronic driver or with dimmable electronic driver on request
- With round cut offf
- IP44

Product Code	GM-CR400(PC)S-W30	GM-CR400(PC)S-N40	GM-CR400(PC)S-C50
Power(W)	15	15	15
Voltage(V)	100-240	100-240	100-240
DC(mA)	350	350	350
CCT(K)	3000	4000	5000
CRI	80	80	80
Beam Angle(°)	38/89	38/89	38/89
Hot Lumen(lm)	1030	1070	1160
Power Factor	>0.5	>0.5	>0.5
Rated Life(°C)	-30~40	-30~40	-30~40
CTN(PCS)	12	12	12

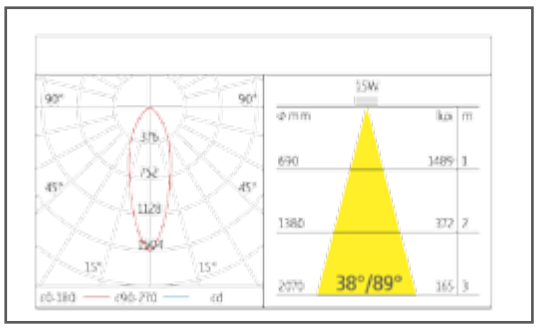

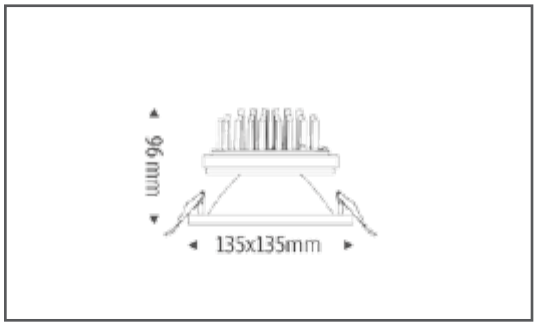

- ϕ125mm (cut out)

MERKUR LED DOWN LIGHT CRIS SQ 6

- CREE

Applications

- Recessed Luminairs LED Downlight
- High efficiency facets aluminium reflectors
- Fresnellens
- Die-cast aluminum mounting ring,with system to fix it to the false ceiling using steel springs
- Die-cast heatsinkwith passive cooling
- Luminaires are equiped with electronic driver or with dimmable electronic driver on request
- With round cut offf
- IP44

Product Code	GM-CRBOO(PC)S-W30	GM-CRBOO(PC)S-N40	GM-CRBOO(PC)S-(50
Power(W)	25	25	25
Voltage(V)	100-240	100-240	100-240
DC(mA)	600	600	600
CCT(K)	3000	4000	5000
CRI	80	80	80
Beam Angle(°)	31/87	31/87	31/87
Hot Lumen(lm)	1650	1770	1840
Power Factor	>0.95	>0.95	>0.95
Rated Life(°C)	-30~40	-30~40	-30~40
CTN(PCS)	12	12	12

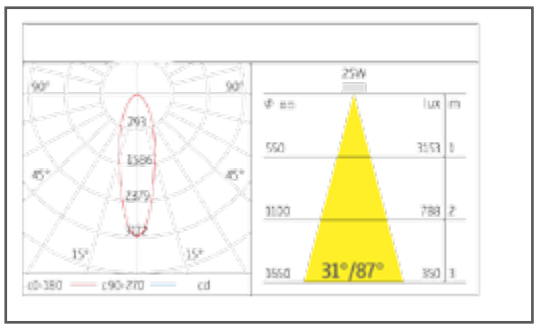

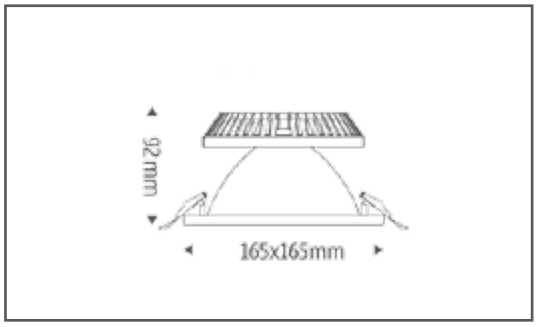

- ϕ150mm (cut out)

MERKUR LED DOWN LIGHT CRIS SQ 7

- CREE

Applications

- Recessed Luminairs LED Downlight
- High efficiency facets aluminium reflectors
- fresnellens
- Die-cast aluminum mounting ring,with system to fix it to the false ceiling using steel springs
- Die-cast heatsinkwith passive cooling
- With round cut off
- IP44

Product Code	GM-CR1200(PC)S-W30	GM-CR1200(PC)S-N40	GM-CR1200(PC)S-C50
Power(W)	30	30	30
Voltage(V)	100-240	100-240	100-240
DC(mA)	700	700	700
CCT(K)	3000	4000	5000
CRI	80	80	80
Beam Angle(°)	35/87	35/87	35/87
Hot Lumen(lm)	2030	2080	2130
Power Factor	>0.95	>0.95	>0.95
Rated Life(°C)	-30~40	-30~40	-30~40
CTN(PCS)	12	12	12

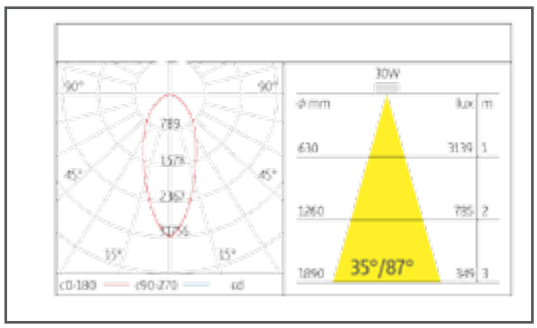

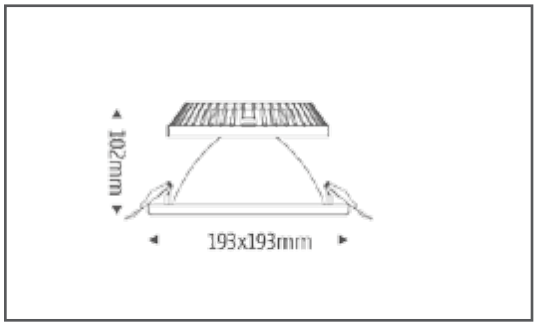

- ϕ180mm (cut out)

MERKUR LED DOWN LIGHT CRIS SQ 8

- CREE

Applications

- Recessed Luminairs LED Downlight
- High efficiency facets aluminium reflectors
- Narrow I wide Beam Angle
- Die-cast aluminum mounting ring,with system to fixit to the false ceiling using steel springs
- Die-cast heat sink with passive cooling
- With round cut offf
- IP44

Product Code	GM-CR2000(PC)S-W30	GM-CR2000(PC)S-N40	GM-CR2000(PC)S-C50
Power(W)	35	35	35
Voltage(V)	100-240	100-240	100-240
DC(mA)	840	840	840
CCT(K)	3000	4000	5000
CRI	80	80	80
Beam Angle(°)	47/122	47/122	47/122
Hot Lumen(lm)	2690	2750	2760
Power Factor	>0.95	>0.95	>0.95
Rated Life(°C)	-30~40	-30~40	-30~40
CTN(PCS)	8	8	8

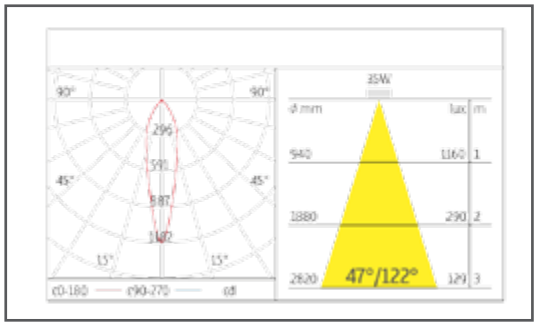

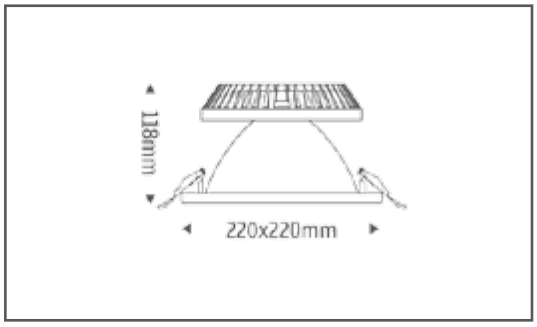

- ϕ205mm (cut out)

MERKUR LED DOWN LIGHT CRIS SQ

- CREE Xlamp CXA COB LED

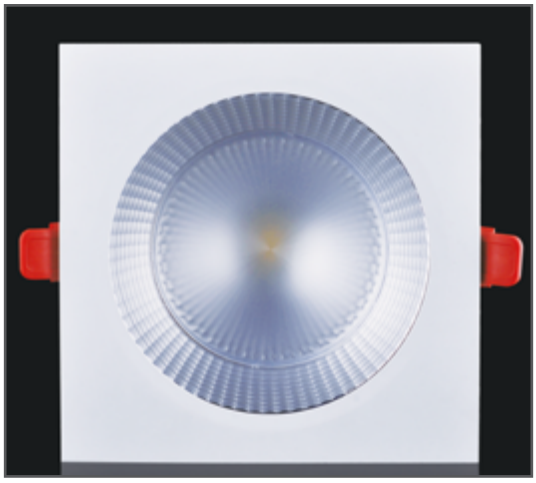

Applications

- One glare cut-off type angles with glare cut-off angle at 20degree. Simple choose this type best suited to your interior requirements.
- A stylish design of square ring with round cut out for easy installations.
- With high efficiency aluminium reflectors optic with facets, newly designed to obtain a uni form distribution for maximum visual comfort.
- The heat sink is made of aluminium die-cast. For recessed fixture of a size to give optimal passive heat dissipation of the LED ARRAY.

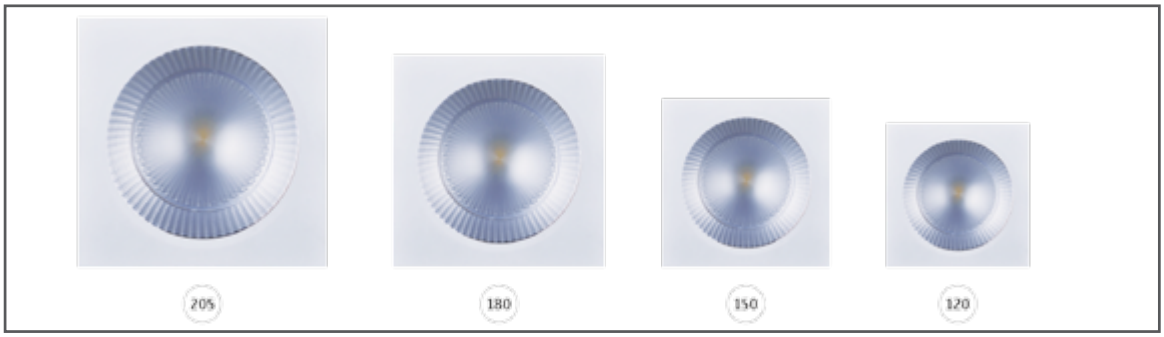

MERKUR LED DOWN LIGHT CRIS SQ 1

- CREE

Applications

- Recessed Luminairs LED Downlight
- High efficiency facets aluminium reflectors
- fresnellens
- Die-cast aluminum mounting ring,with system to fix it to the false ceiling using steel springs
- Luminaires are equiped with electronic driver or with dimmable electronic driver on request
- Die-cast heat sink with passive cooling
- With round cut off
- IP44

Product Code	GM-CR400DRS-W30	GM-CR400DRS-N40	GM-CR400DRS-C50
Power(W)	15	15	15
Voltage(V)	100-240	100-240	100-240
DC(mA)	350	350	350
CCT(K)	3000	4000	5000
CRI	80	80	80
Beam Angle(°)	50/97	50/97	50/97
Hot Lumen(lm)	1020	1150	1170
Power Factor	>0.5	>0.5	>0.5
Rated Life(°C)	-30~40	-30~40	-30~40
CTN(PCS)	12	12	12

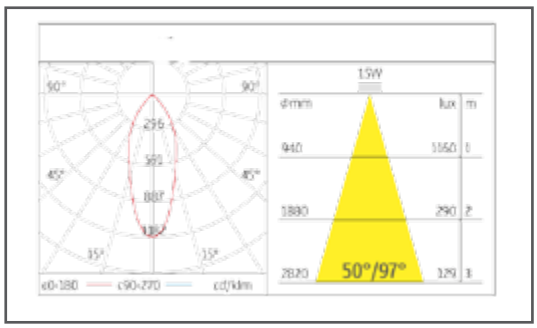

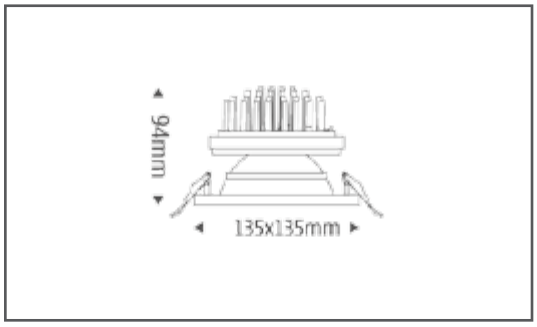

- ϕ125mm (cut out)

MERKUR LED DOWN LIGHT CRIS SQ 2

- CREE

Applications

- Recessed Luminairs LED Downlight
- High efficiency facets aluminium reflectors
- fresnel lens
- Die-cast aluminum mounting ring,with system to fix it to the false ceiling using steel springs
- Die-cast heat sink with passive cooling
- luminaires are equiped with electronic driver or with dimmable electronic driver on request
- With round cut off
- IP44

Product Code	GM-CRB00DRS-W30	GM-CRB00DRS-N40	GM-CRB00DRS-C50
Power(W)	25	25	25
Voltage(V)	100-240	100-240	100-240
DC(mA)	600	600	600
CCT(K)	3000	4000	5000
CRI	80	80	80
Beam Angle(°)	48/92	48/92	48/92
Hot Lumen(lm)	1660	1770	1780
Power Factor	>0.95	>0.95	>0.95
Rated Life(°C)	-30~40	-30~40	-30~40
CTN(PCS)	12	12	12

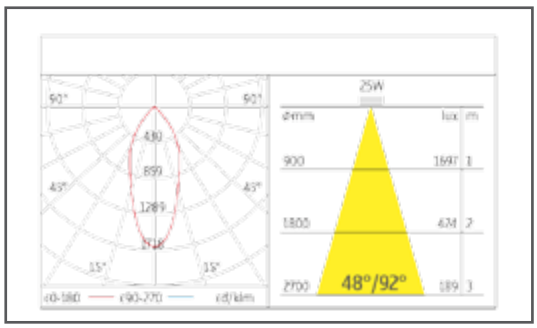

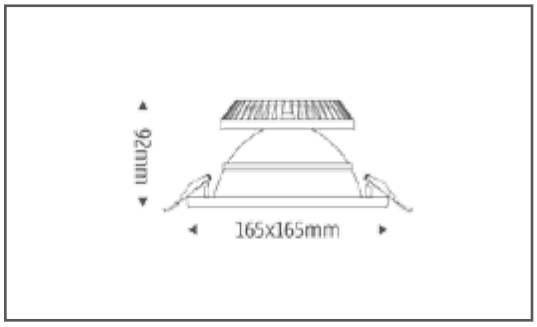

- ϕ150mm (cut out)

MERKUR LED DOWN LIGHT CRIS SQ 3

- CREE

Applications

- Recessed Luminairs LED Downlight
- High efficiency facets aluminium reflectors
- fresnel lens
- Die-cast aluminum mounting ring,with system to fix it to the false ceiling using steel springs
- Die-cast heat sink with passive cooling
- With round cut off
- IP44

Product Code	GM-CR1200DRS-W30	GM-CR1200DRS-N40	GM-CR1200DRS-C50
Power(W)	30	30	30
Voltage(V)	100-240	100-240	100-240
DC(mA)	700	700	700
CCT(K)	3000	4000	5000
CRI	80	80	80
Beam Angle(°)	42/93	42/93	42/93
Hot Lumen(lm)	2150	2280	2320
Power Factor	>0.95	>0.95	>0.95
Rated Life(°C)	-30~40	-30~40	-30~40
CTN(PCS)	12	12	12

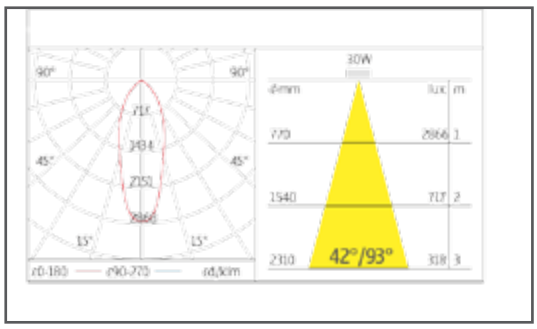

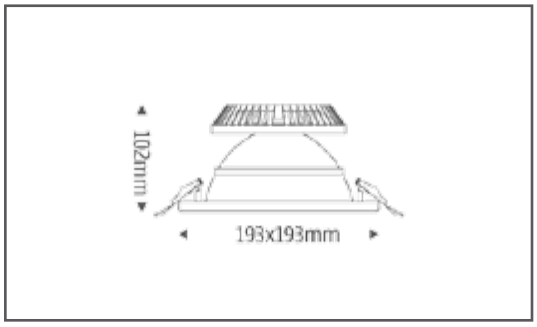

- ϕ125mm (cut out)

MERKUR LED DOWN LIGHT CRIS SQ 4

- CREE

Applications

- Recessed Luminairs LED Downlight
- High efficiency facets aluminium reflectors
- fresnel lens
- Die-cast aluminum mounting ring,with system to fix it to the false ceiling using steel springs
- Die-cast heat sink with passive cooling
- With round cut off
- IP44

Product Code	GM-CR2000DRS-W30	GM-CR2000DRS-N40	GM-CR2000DRS-C50
Power(W)	35	35	35
Voltage(V)	100-240	100-240	100-240
DC(mA)	840	840	840
CCT(K)	3000	4000	5000
CRI	80	80	80
Beam Angle(°)	42/89	42/89	42/89
Hot Lumen(lm)	2850	2880	2910
Power Factor	>0.95	>0.95	>0.95
Rated Life(°C)	-30~40	-30~40	-30~40
CTN(PCS)	8	8	8

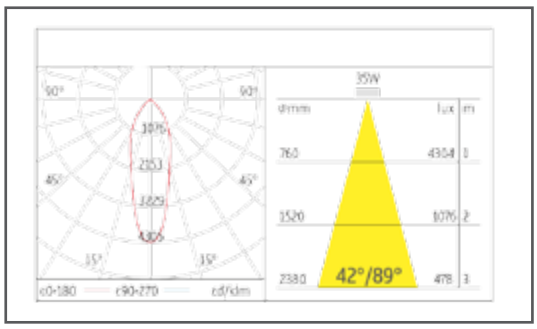

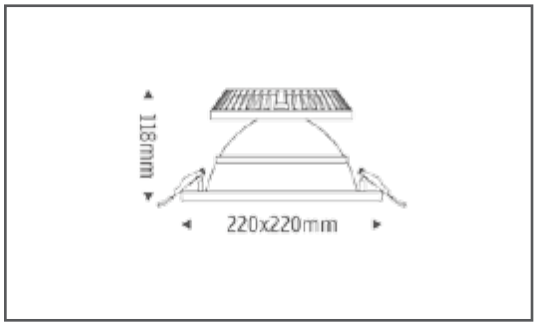

- ϕ150mm (cut out)

MERKUR LED DOWN LIGHT TORNADO

- CREE Xlamp CXA COB LED

Applications

- The front section is painted powder coat. The design encompasses low-power LED SMT technology and an electronic power supply. An opal diffuser provides good light transmission, uniformity, and glare control.
- TONARDO is a compact die cast aluminium LED downlight range capable of delivering light output similar to that of conventional CFL lamps.

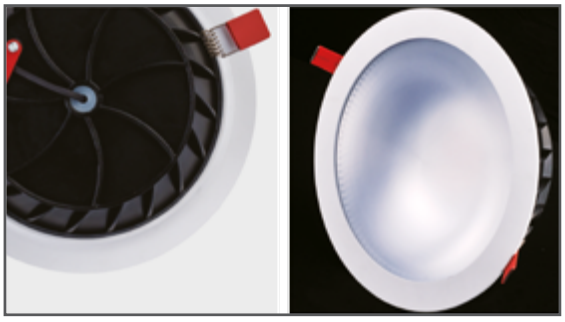

MERKUR LED DOWN LIGHT TORNADO

- CREE

Applications

- Recessed Luminairs LED Downlight
- High efficiency facets aluminium reflectors
- Wide Beam Angle
- Fresnel lens
- Die-cast aluminum mounting ring with system to fix it to the false ceiling using steel springs
- Die-cast heat sink with passive cooling
- Luminaires are equipped with electronic driver or with dimmable electronic driver on request
- IP44

Product Code	GM-SAM140-W30	GM-SAM140-N40	GM-SAM140-C50
Power(W)	10	10	10
Voltage(V)	100-240	100-240	100-240
DC(mA)	350	350	350
CCT(K)	3000	4000	5000
CRI	80	80	80
Beam Angle(°)	82/136	82/136	82/136
Hot Lumen(lm)	710	730	760
Power Factor	>0.5	>0.5	>0.5
Rated Life(°C)	-30~40	-30~40	-30~40
CTN(PCS)	12	12	12

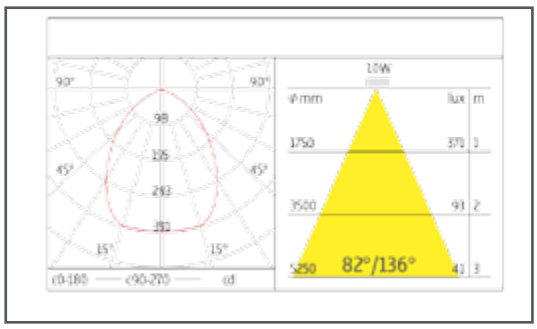

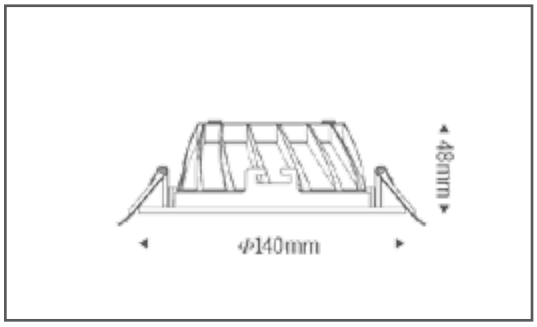

- ϕ125mm (cut out)

MERKUR LED DOWN LIGHT TORNADO-2

- CREE

Applications

- Recessed Luminairs LED Downlight
- High efficiency facets aluminium reflectors
- Wide Beam Angle
- Fresnel lens
- Die-cast aluminum mounting ring with system to fix it to the false ceiling using steel springs
- Die-cast heat sink with passive cooling
- Luminaires are equipped with electronic driver or with dimmable electronic driver on request
- IP44

Product Code	GM-SAM165-W30	GM-SAM165-N40	GM-SAM165-C50
Power(W)	12	12	12
Voltage(V)	100-240	100-240	100-240
DC(mA)	350	350	350
CCT(K)	3000	4000	5000
CRI	80	80	80
Beam Angle(°)	72/129	72/129	72/129
Hot Lumen(lm)	960	980	1020
Power Factor	>0.5	>0.5	>0.5
Rated Life(°C)	-30~40	-30~40	-30~40
CTN(PCS)	12	12	12

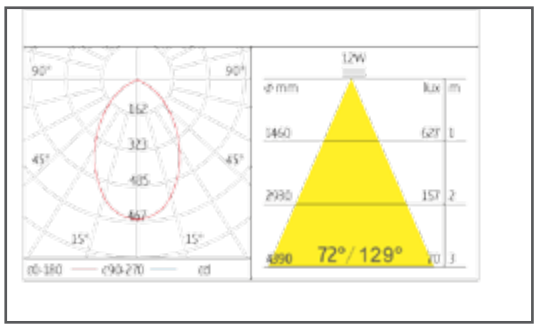

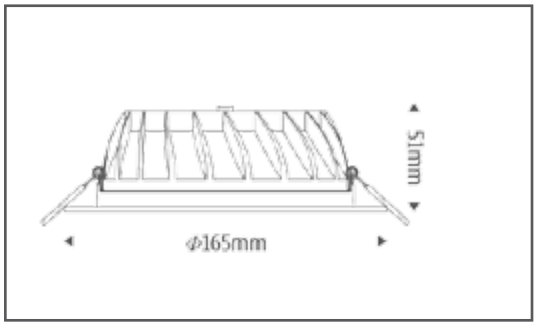

- ϕ150mm (cut out)

MERKUR LED DOWN LIGHT TORNADO-3

- CREE

Applications

- Recessed Luminairs LED Downlight
- High efficiency facets aluminium reflectors
- Wide Beam Angle
- Fresnel lens
- Die-cast aluminum mounting ring with system to fix it to the false ceiling using steel springs
- Die-cast heat sink with passive cooling
- Luminaires are equipped with electronic driver or with dimmable electronic driver on request
- IP44

Product Code	GM-SAM193-W30	GM-SAM193-N40	GM-SAM193-C50
Power(W)	16	16	16
Voltage(V)	100-240	100-240	100-240
DC(mA)	350	350	350
CCT(K)	3000	4000	5000
CRI	80	80	80
Beam Angle(°)	77/131	77/131	7/131
Hot Lumen(lm)	710	730	760
Power Factor	>0.5	>0.5	>0.5
Rated Life(°C)	-30~40	-30~40	-30~40
CTN(PCS)	12	12	12

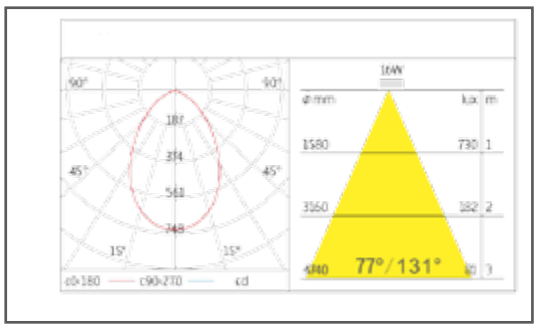

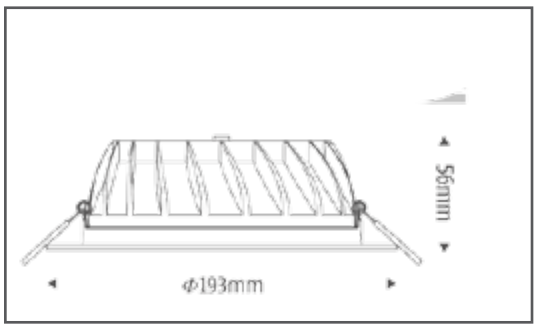

- ϕ180mm (cut out)

MERKUR LED DOWN LIGHT TORNADO-4

- CREE

Applications

- Recessed Luminairs LED Downlight
- High efficiency facets aluminium reflectors
- Wide Beam Angle
- Fresnel lens
- Die-cast aluminum mounting ring with system to fix it to the false ceiling using steel springs
- Die-cast heat sink with passive cooling
- Luminaires are equipped with electronic driver or with dimmable electronic driver on request
- IP44

Product Code	GM-SAM220-W30	GM-SAM220-N40	GM-SAM220-C50
Power(W)	20	20	20
Voltage(V)	100-240	100-240	100-240
DC(mA)	500	500	500
CCT(K)	3000	4000	5000
CRI	80	80	80
Beam Angle(°)	70/125	70/125	70/125
Hot Lumen(lm)	1810	1840	1890
Power Factor	>0.95	>0.95	>0.95
Rated Life(°C)	-30~40	-30~40	-30~40
CTN(PCS)	12	12	12

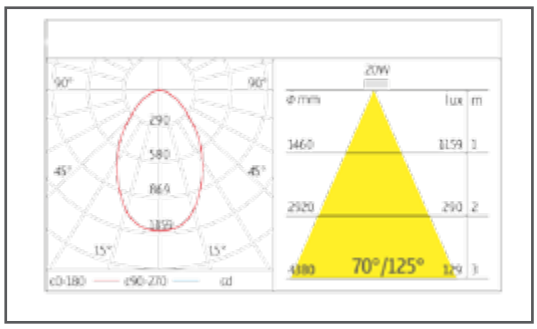

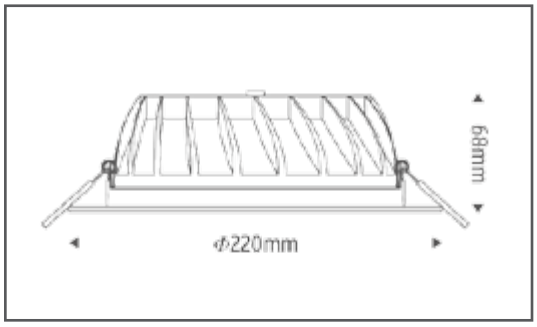

- ϕ200mm (cut out)

MERKUR LED DOWN LIGHT TORNADO-5

- CREE

Applications

- Recessed Luminairs LED Downlight
- High efficiency facets aluminium reflectors
- Wide Beam Angle
- Fresnel lens
- Die-cast aluminum mounting ring with system to fix it to the false ceiling using steel springs
- Die-cast heat sink with passive cooling
- Luminaires are equipped with electronic driver or with dimmable electronic driver on request
- IP44

Product Code	GM-SAM265-W30	GM-SAM265-N40	GM-SAM265-C50
Power(W)	30	30	30
Voltage(V)	100-240	100-240	100-240
DC(mA)	700	700	700
CCT(K)	3000	4000	5000
CRI	80	80	80
Beam Angle(°)	100/135	100/135	100/135
Hot Lumen(lm)	2250	2580	2600
Power Factor	>0.95	>0.95	>0.95
Rated Life(°C)	-30~40	-30~40	-30~40
CTN(PCS)	8	8	8

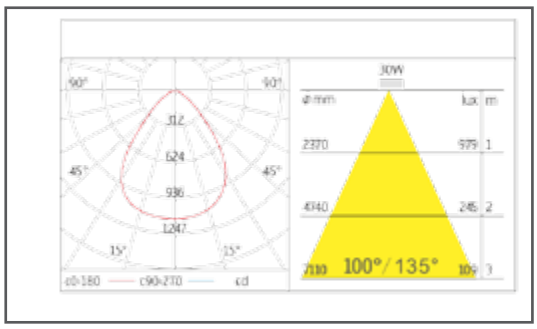

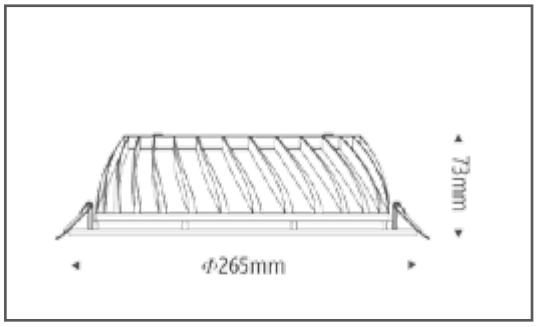

- ϕ250mm (cut out)

MERKUR LED DOWN LIGHT TORNADO-6

- CREE

Applications

- Recessed Luminairs LED Downlight
- High efficiency facets aluminium reflectors
- Wide Beam Angle
- Fresnel lens
- Die-cast aluminum mounting ring with system to fix it to the false ceiling using steel springs
- Die-cast heat sink with passive cooling
- Luminaires are equipped with electronic driver or with dimmable electronic driver on request
- IP44

Product Code	GM-SAM335-W30	GM-SAM335-N40	GM-SAM335-C50
Power(W)	35	35	35
Voltage(V)	100-240	100-240	100-240
DC(mA)	700	700	700
CCT(K)	3000	4000	5000
CRI	80	80	80
Beam Angle(°)	100/140	100/140	100/140
Hot Lumen(lm)	1810	1840	1890
Power Factor	>0.95	>0.95	>0.95
Rated Life(°C)	-30~40	-30~40	-30~40
CTN(PCS)	4	4	4

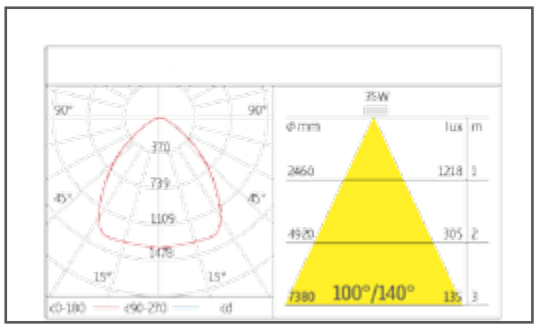

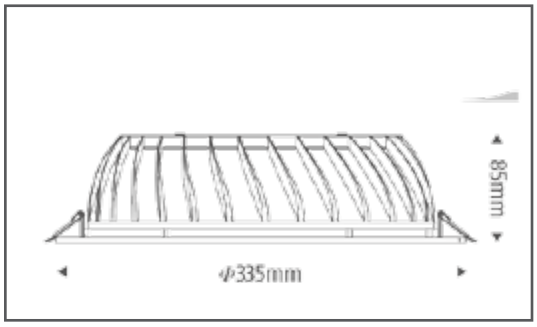

- ϕ320mm (cut out)

MERKUR LED DOWN LIGHT TORNADO

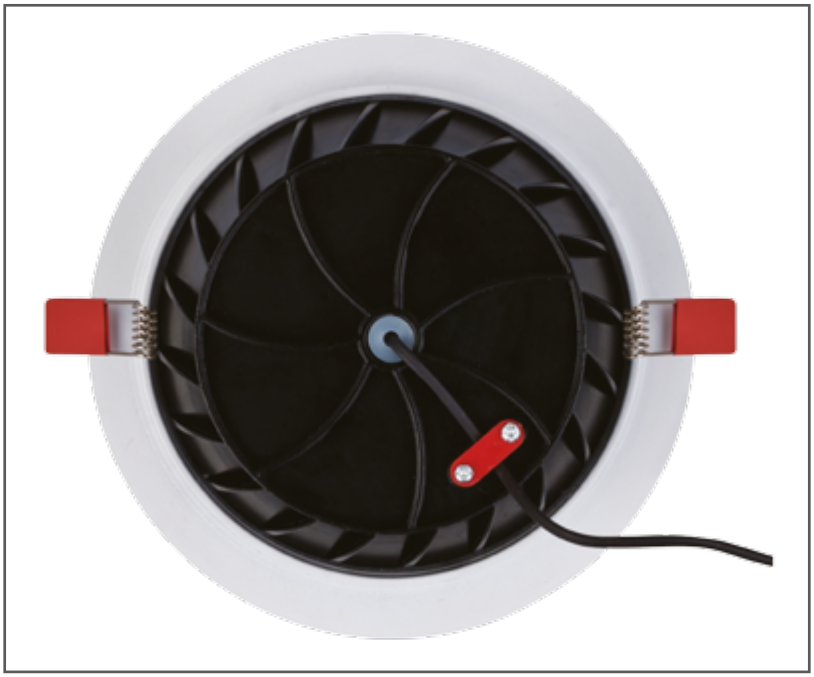

DUPROLUX®
LIGHTING

www.merkur-hamburg.de

MERKUR LED DOWN LIGHT TORNADO SQ

- Samsung LED

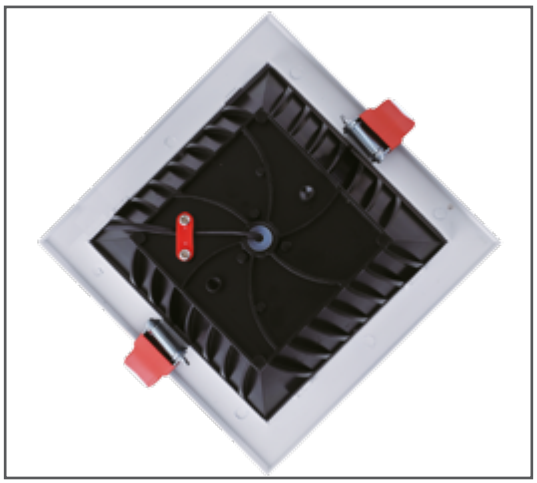

Applications

- TONARDO SQ is the new design from GAMA. The aluminium die cast heat sink is coating by electrophores. They are available in six power levels,from 10W to 35W.

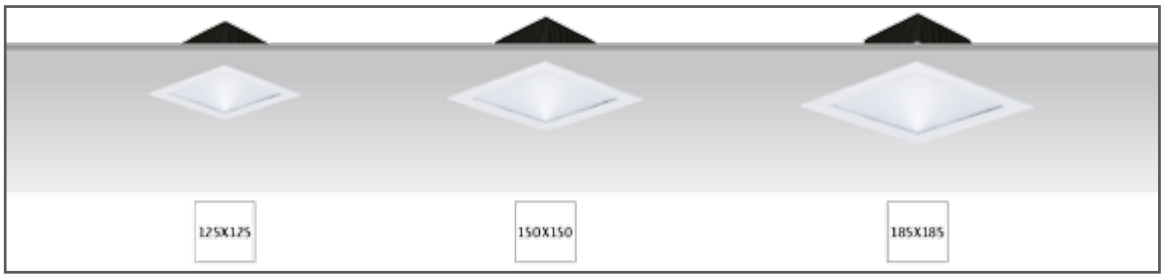

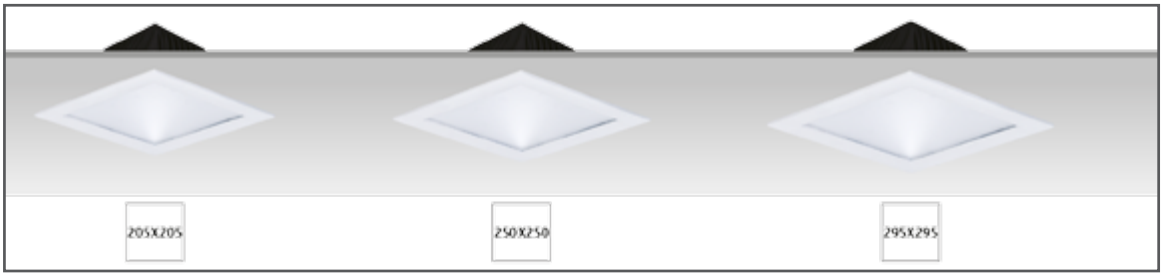

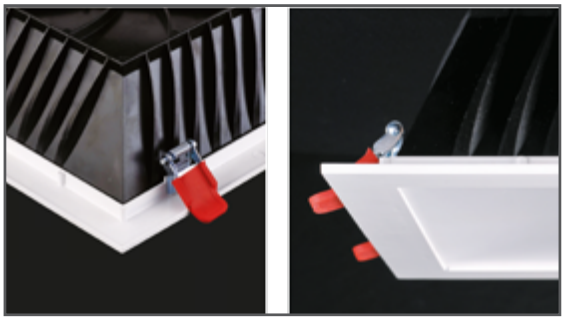

MERKUR LED DOWN LIGHT TORNADO SQ 1

- CREE

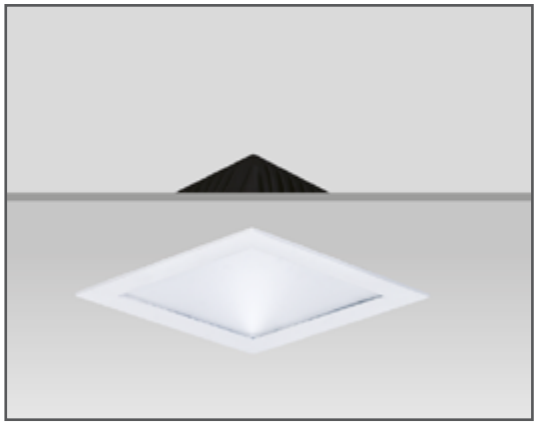

Applications

- Recessed Luminairs LED Downlight
- High efficiency facets aluminium reflectors
- Wide Beam Angle
- Fresnel lens
- Die-cast aluminum mounting ring with system to fix it to the false ceiling using steel springs
- Die-cast heat sink with passive cooling
- Luminaires are equipped with electronic driver or with dimmable electronic driver on request
- IP44

Product Code	GM-SAM140S-W30	GM-SAM140S-N40	GM-SAM140S-C50
Power(W)	10	10	10
Voltage(V)	100-240	100-240	100-240
DC(mA)	350	350	350
CCT(K)	3000	4000	5000
CRI	80	80	80
Beam Angle(°)	85/135	85/135	85/135
Hot Lumen(lm)	660	670	700
Power Factor	>0.5	>0.5	>0.5
Rated Life(°C)	-30~40	-30~40	-30~40
CTN(PCS)	12	12	12

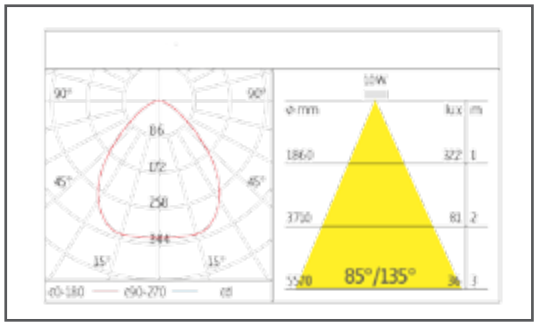

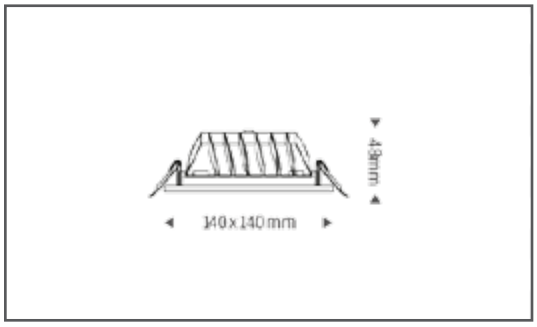

- ϕ125x125mm (cut out)

MERKUR LED DOWN LIGHT TORNADO SQ 2

- CREE

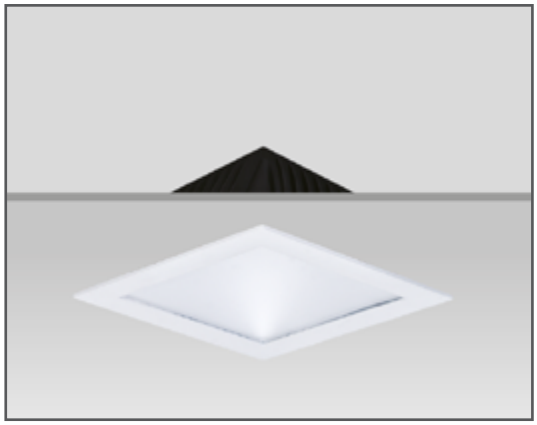

Applications

- Recessed Luminairs LED Downlight
- High efficiency facets aluminium reflectors
- Wide Beam Angle
- Fresnel lens
- Die-cast aluminum mounting ring with system to fix it to the false ceiling using steel springs
- Die-cast heat sink with passive cooling
- Luminaires are equipped with electronic driver or with dimmable electronic driver on request
- IP44

Product Code	GM-SAM335-W30	GM-SAM335-N40	GM-SAM335-C50
Power(W)	12	12	12
Voltage(V)	100-240	100-240	100-240
DC(mA)	350	350	350
CCT(K)	3000	4000	5000
CRI	80	80	80
Beam Angle(°)	80/130	80/130	80/130
Hot Lumen(lm)	890	900	920
Power Factor	>0.5	>0.5	>0.5
Rated Life(°C)	-30~40	-30~40	-30~40
CTN(PCS)	12	12	12

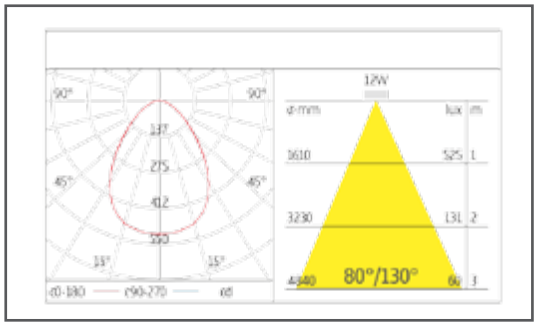

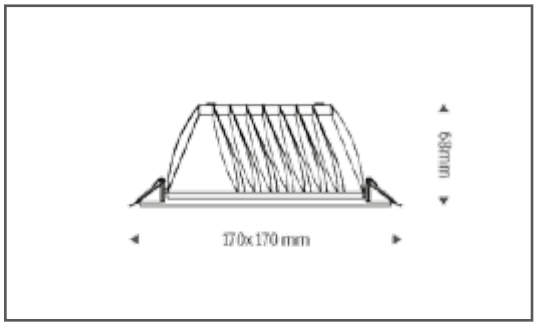

- ϕ150x125mm (cut out)

MERKUR LED DOWN LIGHT TORNADO SQ 3

- Samsung, LG

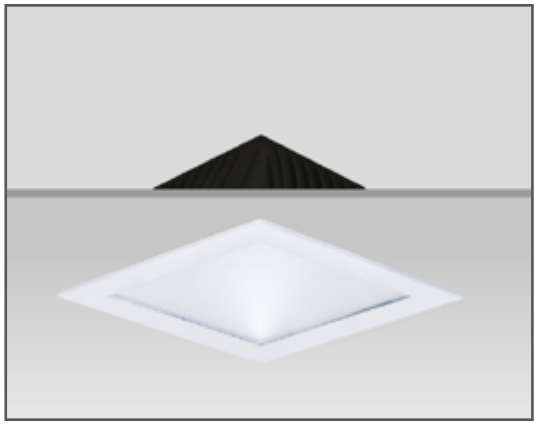

Applications

- Recessed Luminairs LED Downlight
- High efficiency facets aluminium reflectors
- Wide Beam Angle
- Fresnel lens
- Die-cast aluminum mounting ring with system to fix it to the false ceiling using steel springs
- Die-cast heat sink with passive cooling
- Luminaires are equipped with electronic driver or with dimmable electronic driver on request
- IP44

Product Code	GM-SAM205S-W30	GM-SAM205S-N40	GM-SAM205S-C50
Power(W)	16	16	16
Voltage(V)	100-240	100-240	100-240
DC(mA)	350	350	350
CCT(K)	3000	4000	5000
CRI	80	80	80
Beam Angle(°)	90/130	90/130	90/130
Hot Lumen(lm)	1180	1200	1230
Power Factor	>0.5	>0.5	>0.5
Rated Life(°C)	-30~40	-30~40	-30~40
CTN(PCS)	12	12	12

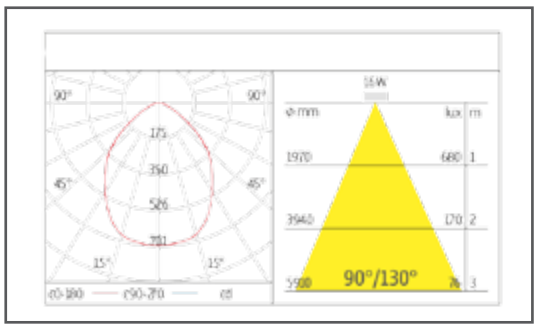

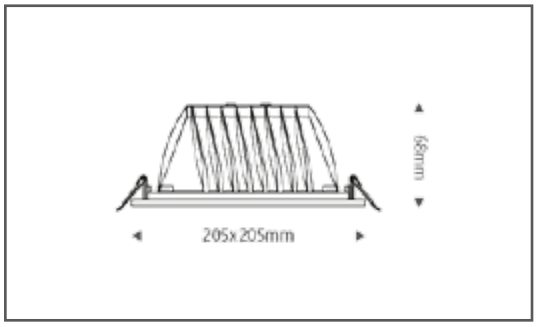

- ϕ185x185mm (cut out)

MERKUR LED DOWN LIGHT TORNADO SQ 4

- Samsung, LG

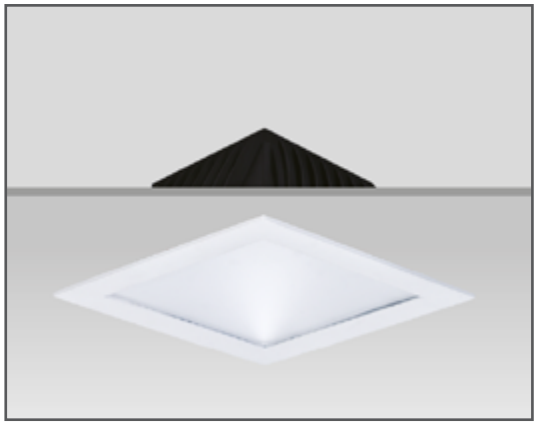

Applications

- Recessed Luminairs LED Downlight
- High efficiency facets aluminium reflectors
- Wide Beam Angle
- Fresnel lens
- Die-cast aluminum mounting ring with system to fix it to the false ceiling using steel springs
- Die-cast heat sink with passive cooling
- Luminaires are equipped with electronic driver or with dimmable electronic driver on request
- IP44

Product Code	GM-SAM225S-W30	GM-SAM225S-N40	GM-SAM225S-C50
Power(W)	20	20	20
Voltage(V)	100-240	100-240	100-240
DC(mA)	500	500	500
CCT(K)	3000	4000	5000
CRI	80	80	80
Beam Angle(°)	85/125	85/125	85/125
Hot Lumen(lm)	1760	1830	1870
Power Factor	>0.95	>0.95	>0.95
Rated Life(°C)	-30~40	-30~40	-30~40
CTN(PCS)	12	12	12

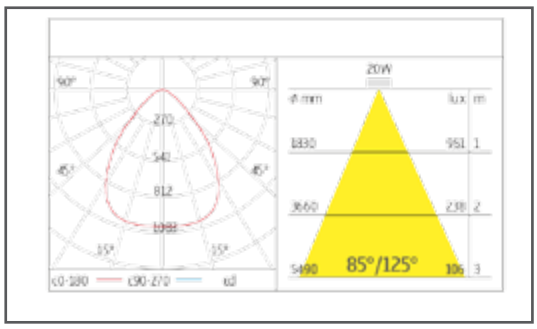

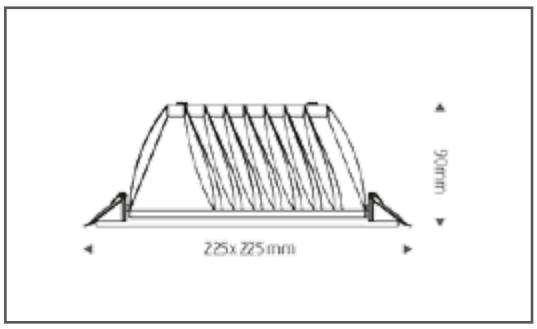

- ϕ205x205mm (cut out)

MERKUR LED DOWN LIGHT TORNADO SQ 5

- Samsung, LG

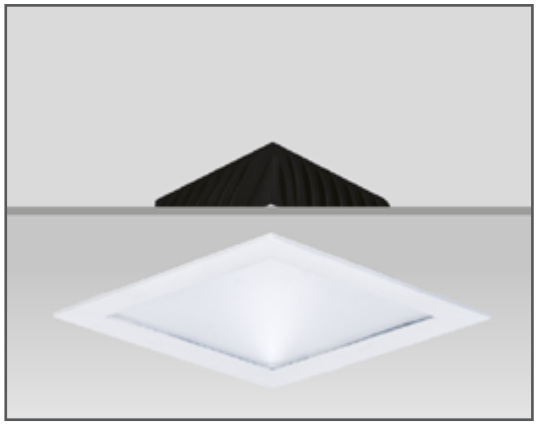

Applications

- Recessed Luminairs LED Downlight
- High efficiency facets aluminium reflectors
- Wide Beam Angle
- Fresnel lens
- Die-cast aluminum mounting ring with system to fix it to the false ceiling using steel springs
- Die-cast heat sink with passive cooling
- Luminaires are equipped with electronic driver or with dimmable electronic driver on request
- IP44

Product Code	GM-SAM270S-W30	GM-SAM270S-N40	GM-SAM270S-C50
Power(W)	30	30	30
Voltage(V)	100-240	100-240	100-240
DC(mA)	700	700	700
CCT(K)	3000	4000	5000
CRI	80	80	80
Beam Angle(°)	85/140	85/140	85/140
Hot Lumen(lm)	2410	2450	2510
Power Factor	>0.95	>0.95	>0.95
Rated Life(°C)	-30~40	-30~40	-30~40
CTN(PCS)	8	8	8

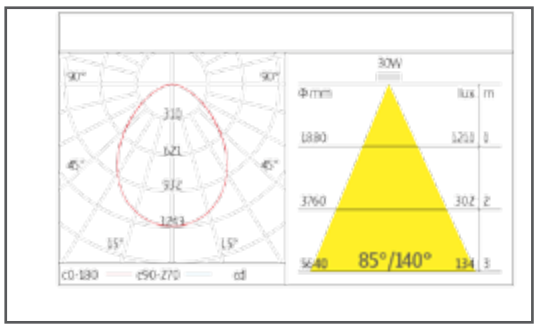

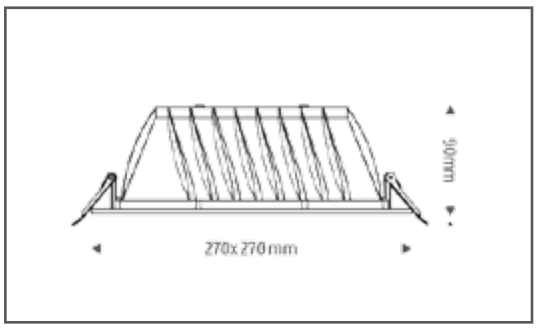

- ϕ250x250mm (cut out)

MERKUR LED DOWN LIGHT TORNADO SQ 6

- Samsung, LG

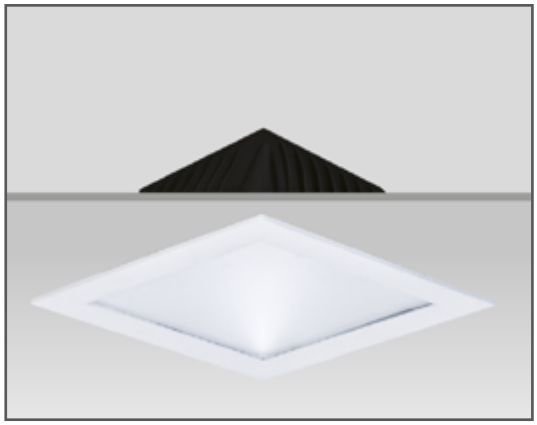

Applications

- Recessed Luminairs LED Downlight
- High efficiency facets aluminium reflectors
- Wide Beam Angle
- Fresnel lens
- Die-cast aluminum mounting ring with system to fix it to the false ceiling using steel springs
- Die-cast heat sink with passive cooling
- Luminaires are equipped with electronic driver or with dimmable electronic driver on request
- IP44

Product Code	GM-SAM315S-W30	GM-SAM315S-N40	GM-SAM315S-C50
Power(W)	35	35	35
Voltage(V)	100-240	100-240	100-240
DC(mA)	700	700	700
CCT(K)	3000	4000	5000
CRI	80	80	80
Beam Angle(°)	100/145	100/145	100/145
Hot Lumen(lm)	3140	3240	3320
Power Factor	>0.95	>0.95	>0.95
Rated Life(°C)	-30~40	-30~40	-30~40
CTN(PCS)	4	4	4

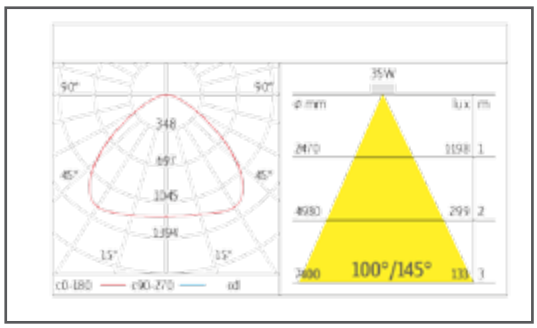

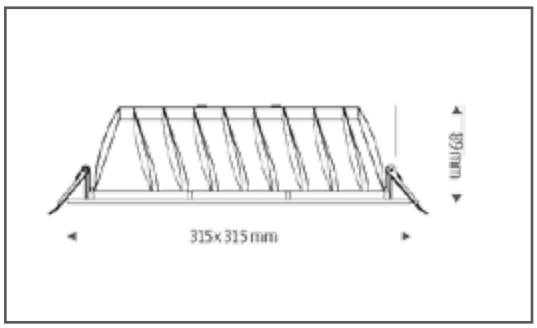

- ϕ295x295mm (cut out)

MERKUR LED DOWN LIGHT TORNADO DR

- Samsung, LG

Applications

- TORNADO DR have the new design ring, giving the people a special feeling.

It is using a new Fresnel lens with a distinct optical design technology that more efficiency reproduces the lighting properties of SMD.
The opal diffuser provides transmission,uniformity and glare control for visual comfort. Matching with the dimmer driver.
It is a good option for a hotels,commercial office, bars, restaurant, waiting rooms and etc.

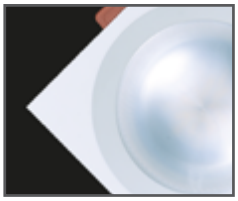

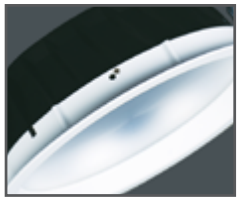

MERKUR LED DOWN LIGHT TORNADO DR 1

- Samsung, LG

Applications

- Recessed Luminairs LED Downlight
- High efficiency facets aluminium reflectors
- Wide Beam Angle
- Fresnel lens
- Die-cast aluminum mounting ring with system to fix it to the false ceiling using steel springs
- Die-cast heat sink with passive cooling
- Luminaires are equipped with electronic driver or with dimmable electronic driver on request
- IP44

Product Code	GM-5AM170DR-W30	GM-5AM170DR-N40	GM-5AM170DR-N50
Power(W)	12	12	12
Voltage(V)	100-240	100-240	100-240
DC(mA)	350	350	350
CCT(K)	3000	4000	5000
CRI	80	80	80
Beam Angle(°)	73/125	73/125	73/125
Hot Lumen(lm)	1010	1050	1100
Power Factor	>0.5	>0.5	>0.5
Rated Life(°C)	-30~40	-30~40	-30~40
CTN(PCS)	12	12	12

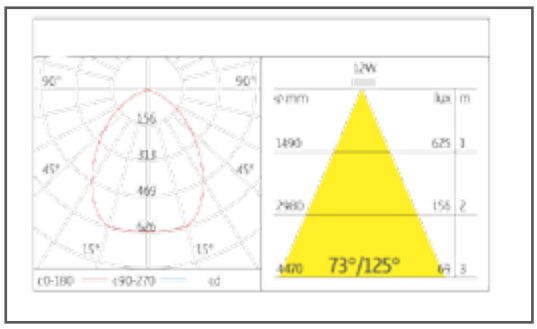

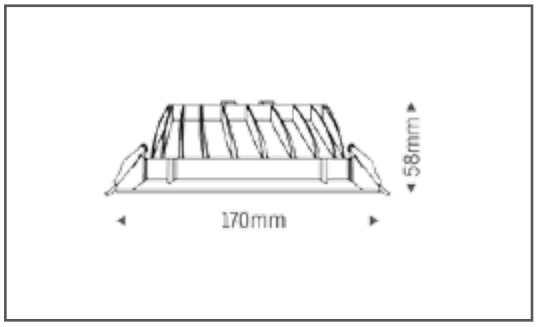

- ϕ150mm (cut out)

MERKUR LED DOWN LIGHT TORNADO DR 2

- Samsung, LG

Applications

- Recessed Luminairs LED Downlight
- High efficiency facets aluminium reflectors
- Wide Beam Angle
- Fresnel lens
- Die-cast aluminum mounting ring with system to fix it to the false ceiling using steel springs
- Die-cast heat sink with passive cooling
- Luminaires are equipped with electronic driver or with dimmable electronic driver on request
- IP44

Product Code	GM-5AM190DR-W30	GM-5AM190DR-N40	GM-5AM190DR-N50
Power(W)	16	16	16
Voltage(V)	100-240	100-240	100-240
DC(mA)	350	350	350
CCT(K)	3000	4000	5000
CRI	80	80	80
Beam Angle(°)	79/130	79/130	79/130
Hot Lumen(lm)	1190	1310	1320
Power Factor	>0.5	>0.5	>0.5
Rated Life(°C)	-30~40	-30~40	-30~40
CTN(PCS)	12	12	12

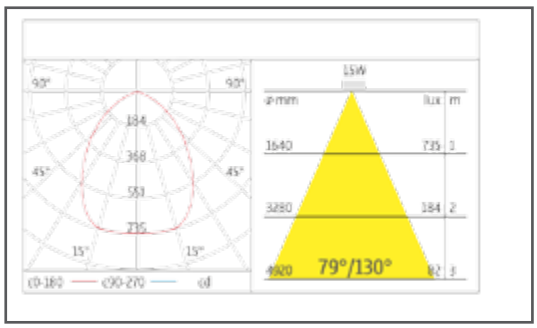

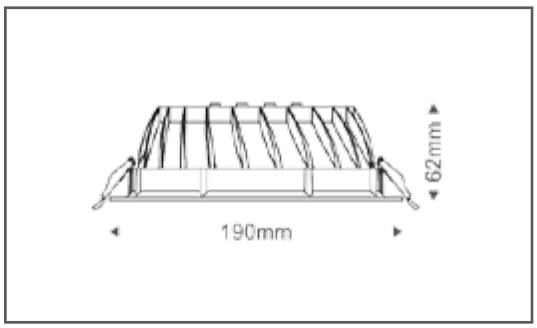

- ϕ180mm (cut out)

MERKUR LED DOWN LIGHT TORNADO DR 3

- Samsung, LG

Applications

- Recessed Luminairs LED Downlight
- High efficiency facets aluminium reflectors
- Wide Beam Angle
- Fresnel lens
- Die-cast aluminum mounting ring with system to fix it to the false ceiling using steel springs
- Die-cast heat sink with passive cooling
- Luminaires are equipped with electronic driver or with dimmable electronic driver on request
- IP44

Product Code	GM-5AM190DR-W30	GM-5AM190DR-N40	GM-5AM190DR-N50
Power(W)	20	20	20
Voltage(V)	100-240	100-240	100-240
DC(mA)	500	500	500
CCT(K)	3000	4000	5000
CRI	80	80	80
Beam Angle(°)	73/125	73/125	73/125
Hot Lumen(lm)	2020	2140	2180
Power Factor	>0.95	>0.95	>0.95
Rated Life(°C)	-30~40	-30~40	-30~40
CTN(PCS)	12	12	12

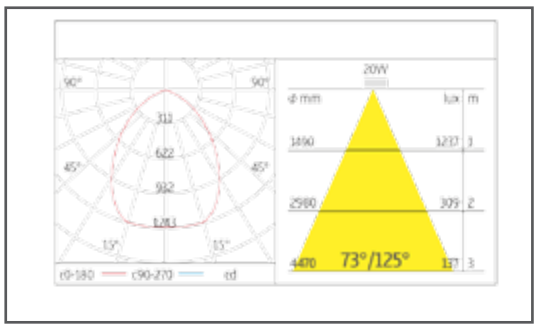

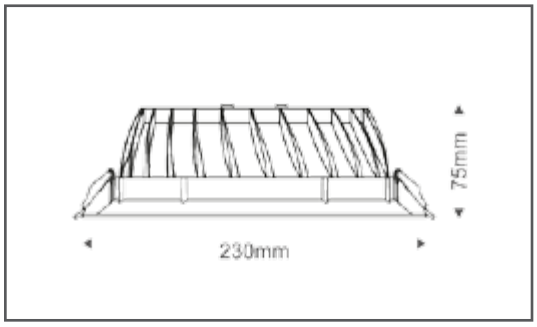

- ϕ200mm (cut out)

MERKUR LED DOWN LIGHT TORNADO DSR

- Samsung LED

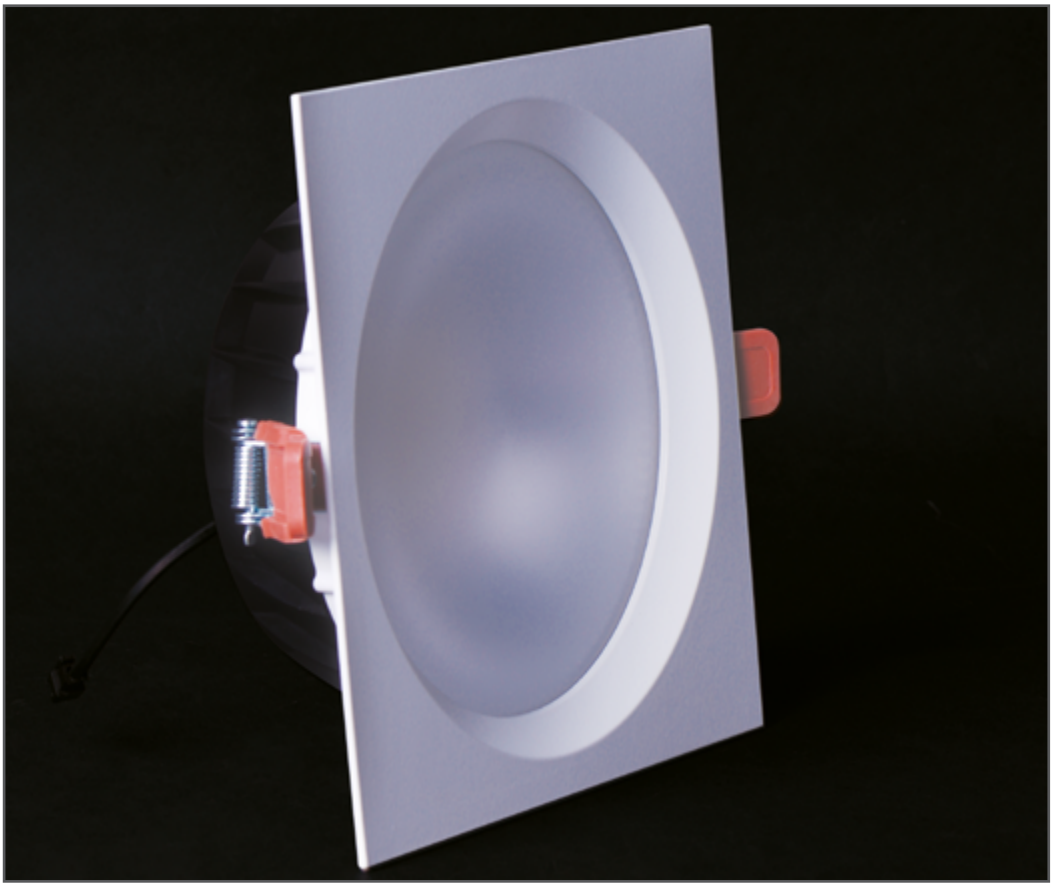

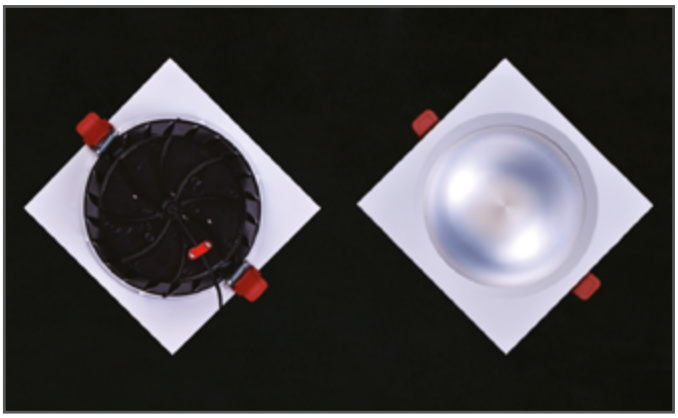

DUPROLUX®
LIGHTING

www.merkur-hamburg.de

MERKUR LED DOWN LIGHT TORNADO DRS 1

- Samsung, LG

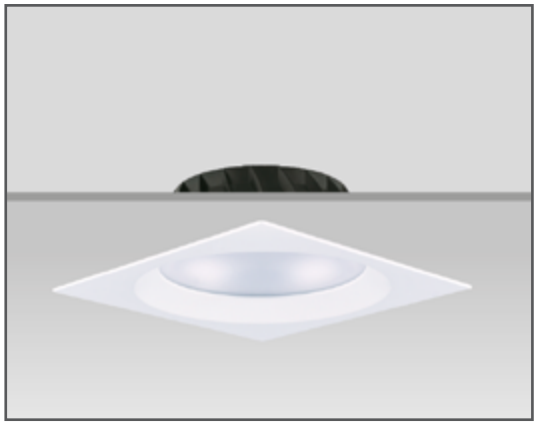

Applications

- Recessed Luminairs LED Downlight
- High efficiency facets aluminium reflectors
- Wide Beam Angle
- Fresnel lens
- Die-cast aluminum mounting ring with system to fix it to the false ceiling using steel springs
- Die-cast heat sink with passive cooling
- Luminaires are equipped with electronic driver or with dimmable electronic driver on request
- IP44

Product Code	6M-SAM170DRS-W30	6M-SAM170DRS-N40	6M-SAM170DRS-N50
Power(W)	12	12	12
Voltage(V)	100-240	100-240	100-240
DC(mA)	350	350	350
CCT(K)	3000	4000	5000
CRI	80	80	80
Beam Angle(°)	73/125	73/125	73/125
Hot Lumen(lm)	1050	1090	1120
Power Factor	>0.5	>0.5	>0.5
Rated Life(°C)	-30~40	-30~40	-30~40
CTN(PCS)	12	12	12

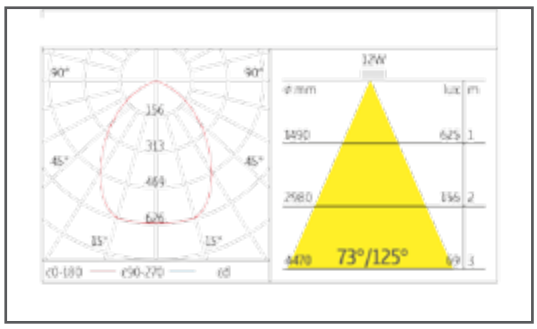

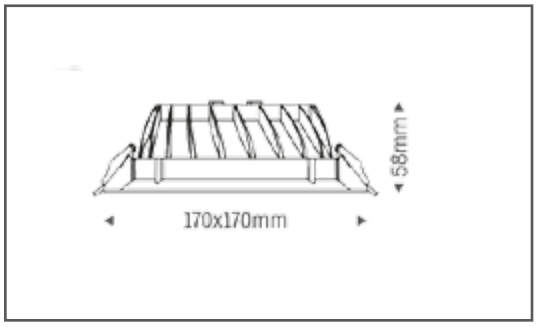

- ϕ180mm (cut out)

MERKUR LED DOWN LIGHT TORNADO DRS 2

- Samsung, LG

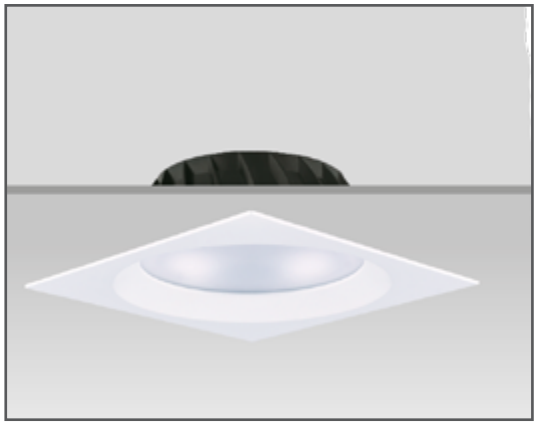

Applications

- Recessed Luminairs LED Downlight
- High efficiency facets aluminium reflectors
- Wide Beam Angle
- Fresnel lens
- Die-cast aluminum mounting ring with system to fix it to the false ceiling using steel springs
- Die-cast heat sink with passive cooling
- Luminaires are equipped with electronic driver or with dimmable electronic driver on request
- IP44

Product Code	GM-SAM190DRS-W30	GM-SAM190DRS-N40	GM-SAM190DRS-N50
Power(W)	16	16	16
Voltage(V)	100-240	100-240	100-240
DC(mA)	350	350	350
CCT(K)	3000	4000	5000
CRI	80	80	80
Beam Angle(°)	79/130	79/130	79/130
Hot Lumen(lm)	1190	1310	1320
Power Factor	>0.5	>0.5	>0.5
Rated Life(°C)	-30~40	-30~40	-30~40
CTN(PCS)	12	12	12

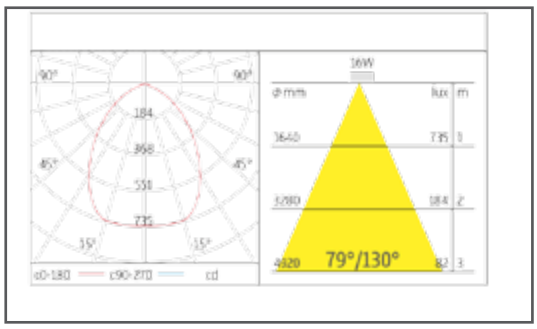

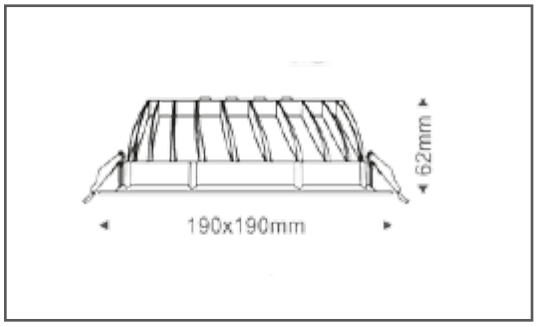

- ϕ180mm (cut out)

MERKUR LED DOWN LIGHT TORNADO DRS 3

- Samsung, LG

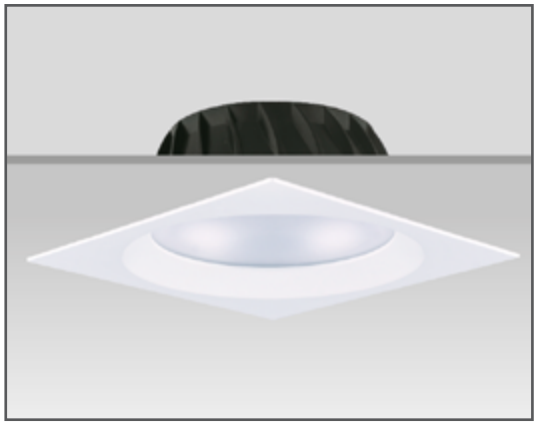

Applications

- Recessed Luminairs LED Downlight
- High efficiency facets aluminium reflectors
- Wide Beam Angle
- Fresnel lens
- Die-cast aluminum mounting ring with system to fix it to the false ceiling using steel springs
- Die-cast heat sink with passive cooling
- Luminaires are equipped with electronic driver or with dimmable electronic driver on request
- IP44

Product Code	CiM-SAM230DRS-W30	CiM-SAM230DRS-N40	CiM-SAM230DRS-NSO
Power(W)	20	20	20
Voltage(V)	100-240	100-240	100-240
DC(mA)	500	500	500
CCT(K)	3000	4000	5000
CRI	80	80	80
Beam Angle(°)	73/125	73/125	73/125
Hot Lumen(lm)	2020	2040	2080
Power Factor	>0.95	>0.95	>0.95
Rated Life(°C)	-30~40	-30~40	-30~40
CTN(PCS)	12	12	12

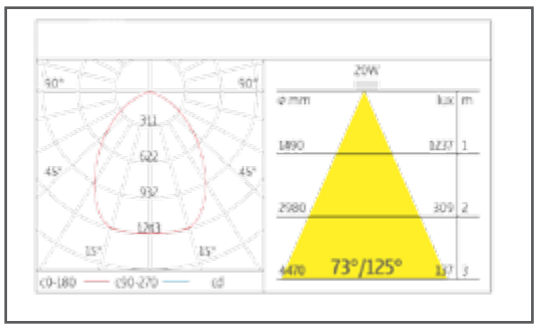

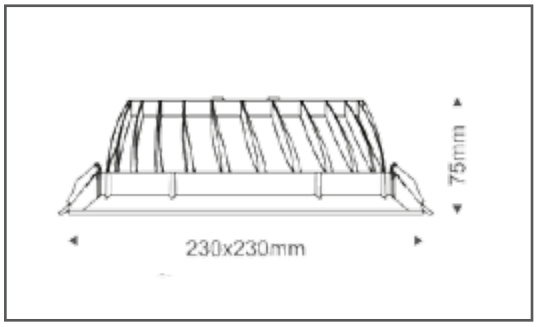

- ϕ215mm (cut out)

MERKUR LED DOWN LIGHT TORNADO TJ

- Samsung LED

Applications

- TORNADO TJ is a compact die cast aluminium LED downlight range capable of deliverin light output similar to that of conventional CFL lamps. The front section is painted powder coat. The design encompasses low-power LED SMT technology and an electronic power supply. an opal diffuser provides good light transmission, uniformity and glare control.

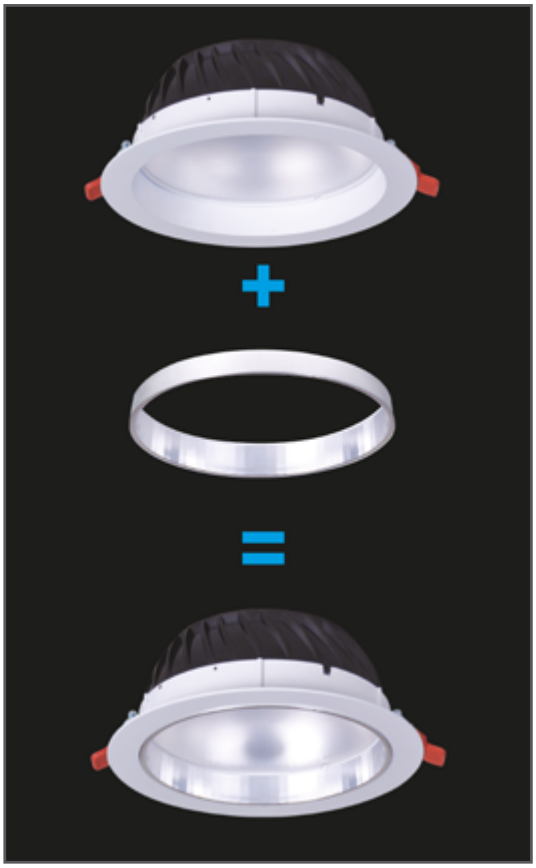

MERKUR LED DOWN LIGHT TORNADO TJ1

- Samsung, LG

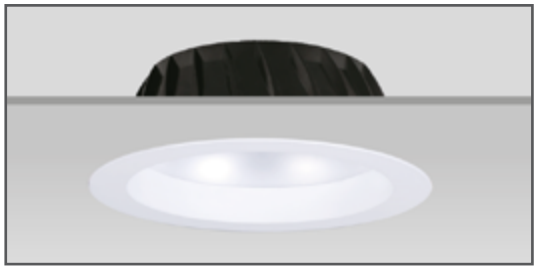

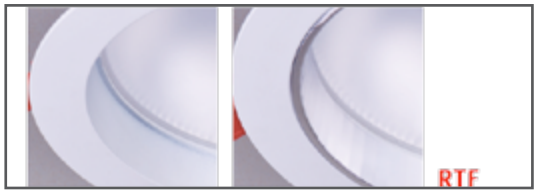

Applications

- Recessed Luminairs LED Downlight
- High efficiency facets aluminium reflectors
- Wide Beam Angle
- Fresnel lens
- Die-cast aluminum mounting ring with system to fix it to the false ceiling using steel springs
- Die-cast heat sink with passive cooling
- Luminaires are equipped with electronic driver or with dimmable electronic driver on request
- IP44

Product Code	GM-SAM110TJ-W30	GM-SAM110TJ-N40	GM-SAM110TJ-C50
Power(W)	12	12	12
Voltage(V)	100-240	100-240	100-240
DC(mA)	350	350	350
CCT(K)	3000	4000	5000
CRI	80	80	80
Beam Angle(°)	78/125	78/125	78/125
Hot Lumen(lm)	890	940	990
Power Factor	>0.5	>0.5	>0.5
Rated Life(°C)	-30~40	-30~40	-30~40
CTN(PCS)	12	12	12

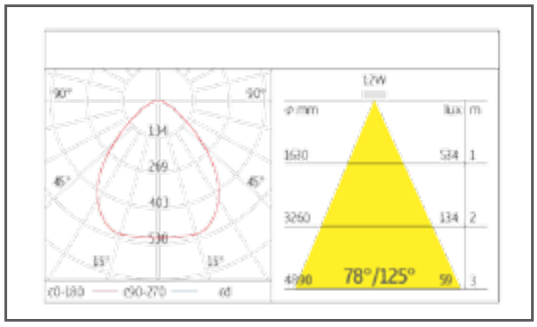

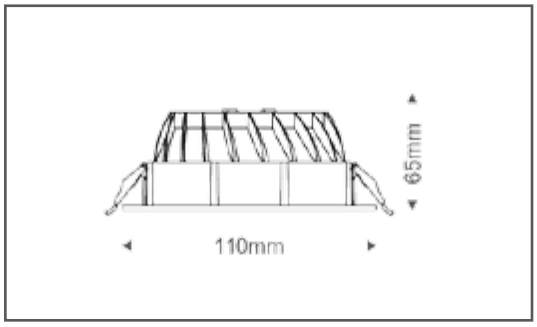

- ϕ100mm (cut out)

MERKUR LED DOWN LIGHT TORNADO TJ2

- Samsung, LG

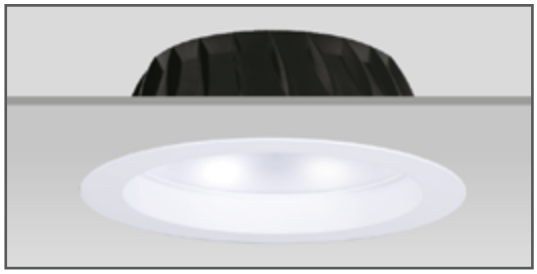

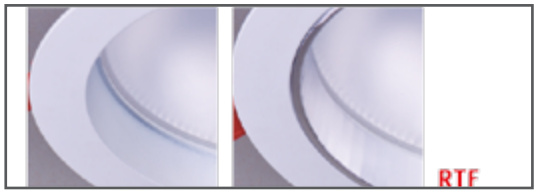

Applications

- Recessed Luminairs LED Downlight
- High efficiency facets aluminium reflectors
- Wide Beam Angle
- Fresnel lens
- Die-cast aluminum mounting ring with system to fix it to the false ceiling using steel springs
- Die-cast heat sink with passive cooling
- Luminaires are equipped with electronic driver or with dimmable electronic driver on request
- IP44

Product Code	GM-SAM140TJ-W30	GM-SAM140TJ-N40	GM-SAM140TJ-C50
Power(W)	10	10	10
Voltage(V)	100-240	100-240	100-240
DC(mA)	350	350	350
CCT(K)	3000	4000	5000
CRI	80	80	80
Beam Angle(°)	67/109	67/109	67/109
Hot Lumen(lm)	630	710	720
Power Factor	>0.5	>0.5	>0.5
Rated Life(°C)	-30~40	-30~40	-30~40
CTN(PCS)	12	12	12

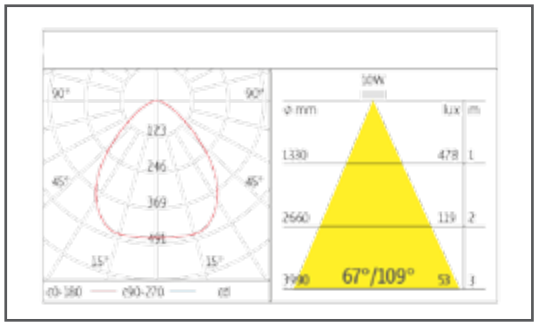

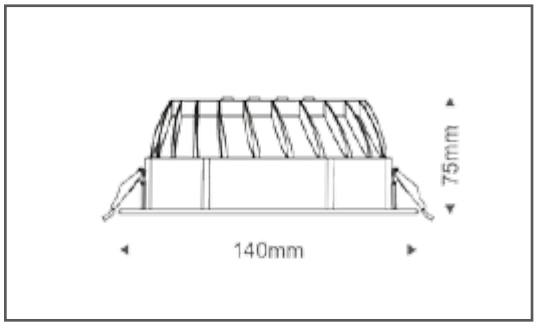

- ϕ125mm (cut out)

MERKUR LED DOWN LIGHT TORNADO TJ3

- Samsung, LG

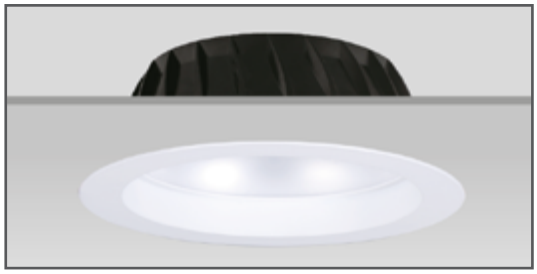

Applications

- Recessed Luminairs LED Downlight
- High efficiency facets aluminium reflectors
- Wide Beam Angle
- Fresnel lens
- Die-cast aluminum mounting ring with system to fix it to the false ceiling using steel springs
- Die-cast heat sink with passive cooling
- Luminaires are equipped with electronic driver or with dimmable electronic driver on request
- IP44

Product Code	GM-SAM170TJ-W30	GM-SAM170TJ-N40	GM-SAM170TJ-C50
Power(W)	12	12	12
Voltage(V)	100-240	100-240	100-240
DC(mA)	350	350	350
CCT(K)	3000	4000	5000
CRI	80	80	80
Beam Angle(°)	73/125	73/125	73/125
Hot Lumen(lm)	970	1020	1050
Power Factor	>0.5	>0.5	>0.5
Rated Life(°C)	-30~40	-30~40	-30~40
CTN(PCS)	12	12	12

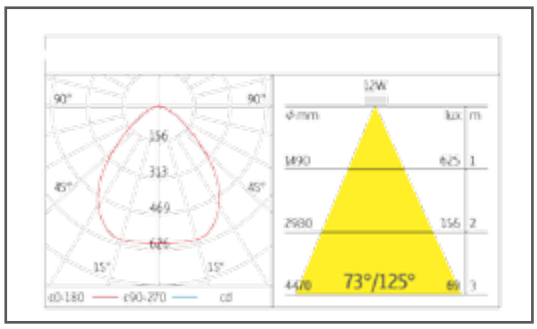

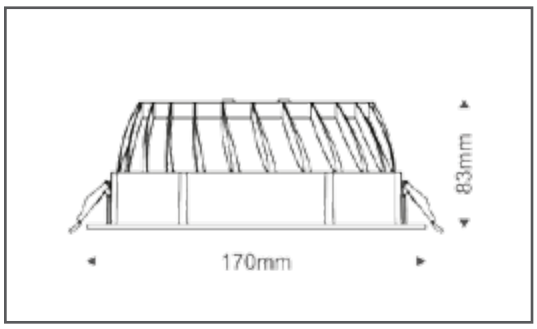

- ϕ150mm (cut out)

MERKUR LED DOWN LIGHT TORNADO TJ4

- Samsung, LG

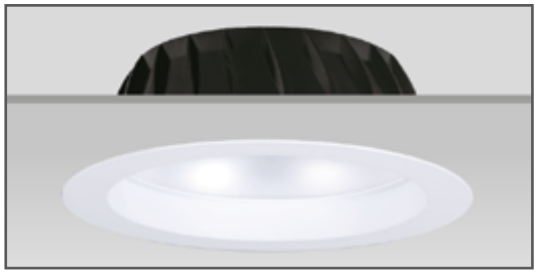

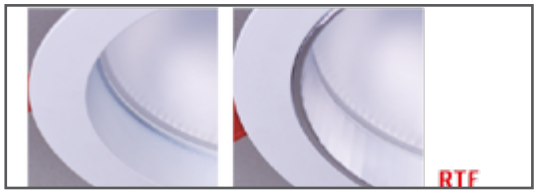

Applications

- Recessed Luminairs LED Downlight
- High efficiency facets aluminium reflectors
- Wide Beam Angle
- Fresnel lens
- Die-cast aluminum mounting ring with system to fix it to the false ceiling using steel springs
- Die-cast heat sink with passive cooling
- Luminaires are equipped with electronic driver or with dimmable electronic driver on request
- IP44

Product Code	GM-SAM190TJ-W30	GM-SAM190TJ-N40	GM-SAM190TJ-C50
Power(W)	16	16	16
Voltage(V)	100-240	100-240	100-240
DC(mA)	350	350	350
CCT(K)	3000	4000	5000
CRI	80	80	80
Beam Angle(°)	75/123	75/123	75/123
Hot Lumen(lm)	1310	1380	1420
Power Factor	>0.5	>0.5	>0.5
Rated Life(°C)	-30~40	-30~40	-30~40
CTN(PCS)	12	12	12

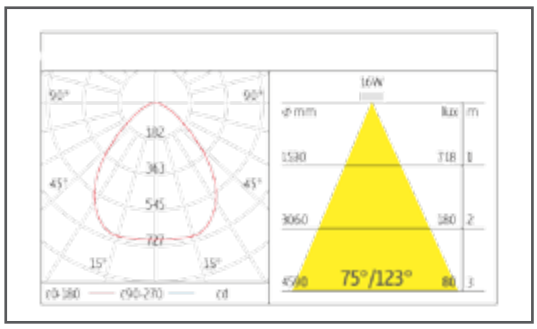

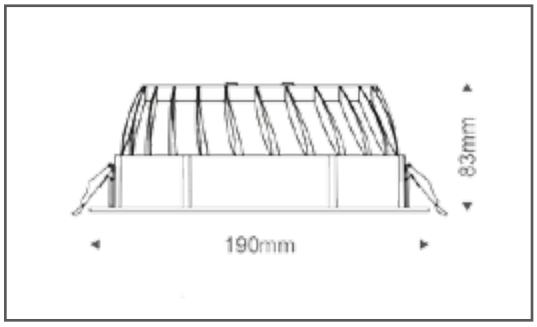

- ϕ180mm (cut out)

MERKUR LED DOWN LIGHT TORNADO TJ5

- Samsung, LG

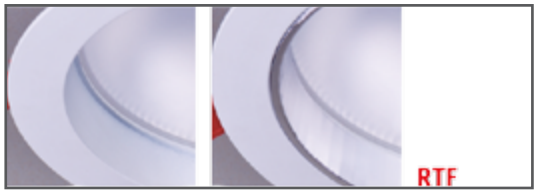

Applications

- Recessed Luminairs LED Downlight
- High efficiency facets aluminium reflectors
- Wide Beam Angle
- Fresnel lens
- Die-cast aluminum mounting ring with system to fix it to the false ceiling using steel springs
- Die-cast heat sink with passive cooling
- Luminaires are equipped with electronic driver or with dimmable electronic driver on request
- IP44

Product Code	GM-SAM230TJ-W30	GM-SAM230TJ-N40	GM-SAM230TJ-C50
Power(W)	20	20	20
Voltage(V)	100-240	100-240	100-240
DC(mA)	500	500	500
CCT(K)	3000	4000	5000
CRI	80	80	80
Beam Angle(°)	69/120	69/120	69/120
Hot Lumen(lm)	1870	1930	1990
Power Factor	>0.95	>0.95	>0.95
Rated Life(°C)	-30~40	-30~40	-30~40
CTN(PCS)	12	12	12

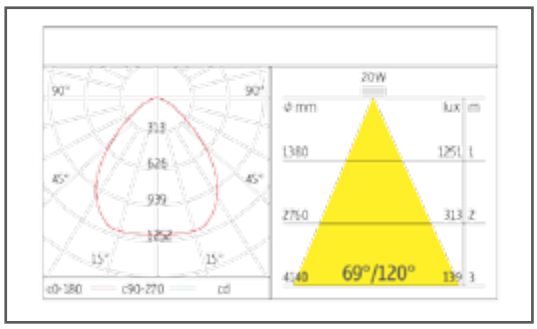

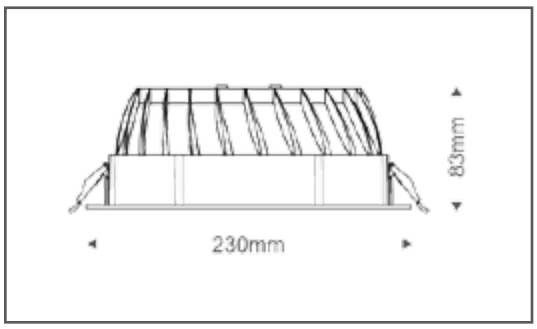

- ϕ205mm (cut out)

MERKUR LED DOWN LIGHT TORNADO TJ6

- Samsung, LG

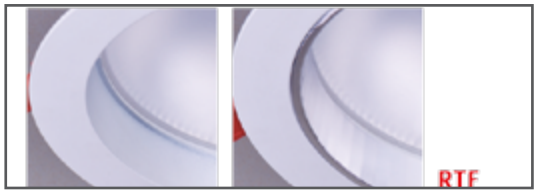

Applications

- Recessed Luminairs LED Downlight
- High efficiency facets aluminium reflectors
- Wide Beam Angle
- Fresnel lens
- Die-cast aluminum mounting ring with system to fix it to the false ceiling using steel springs
- Die-cast heat sink with passive cooling
- Luminaires are equipped with electronic driver or with dimmable electronic driver on request
- IP44

Product Code	GM-SAM245TJ-W30	GM-SAM245TJ-N40	GM-SAM245TJ-C50
Power(W)	20	20	20
Voltage(V)	100-240	100-240	100-240
DC(mA)	500	500	500
CCT(K)	3000	4000	5000
CRI	80	80	80
Beam Angle(°)	90/135	90/135	90/135
Hot Lumen(lm)	1750	1840	1900
Power Factor	>0.95	>0.95	>0.95
Rated Life(°C)	-30~40	-30~40	-30~40
CTN(PCS)	12	12	12

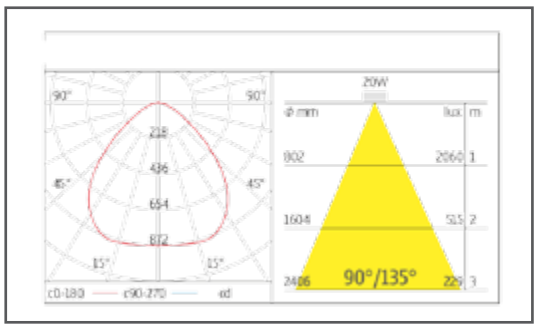

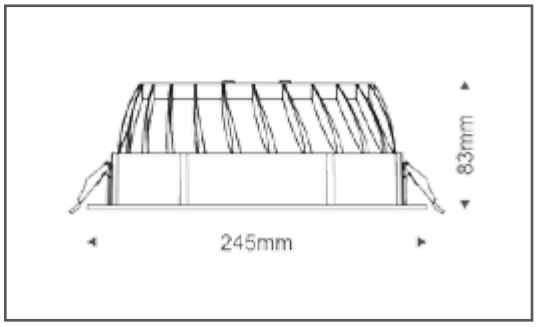

- ϕ220mm (cut out)

MERKUR LED DOWN LIGHT MARKER

- CreeXlamp XB-D EasyWhite LEDs

Applications

- The Marker has a high efficiend Reflector and anti glare design with an opal polycarbonate cover giving the downlight an IP34 classification.
- It is suitable for use with a wide range of highting controls

MERKUR LED DOWN LIGHT MARKER 1

- Cree

Applications

- Recessed Luminairs LED Downlight
- High efficiency facets aluminium reflectors
- Wide Beam Angle
- Clear glass / frosted glass upon request
- Die-cast aluminum mounting ring, with system to fix it to the false ceiling using steel springs
- Die-cast heat sink with passive cooling
- Luminaires are equipped with electronic driver or with dimmable electronic driver on request
- IP34

Product Code	GM-CR14DR-W30	GM-CR14DR-N40	GM-CR14DR-C50
Power(W)	30	30	30
Voltage(V)	100-240	100-240	100-240
DC(mA)	700	700	700
CCT(K)	3000	4000	4000
CRI	80	75	75
Beam Angle(°)	65/115	65/115	65/115
Hot Lumen(lm)	1860	2015	2200
Power Factor	>0.95	>0.95	>0.95
Rated Life(°C)	-30~40	-30~40	-30~40
CTN(PCS)	8	8	8

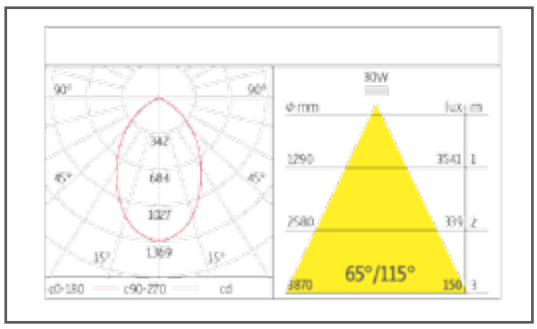

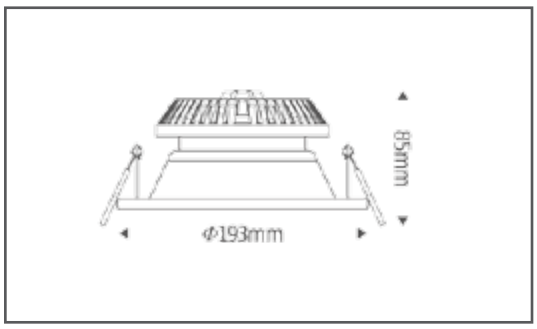

- ϕ180mm (cut out)

MERKUR LED DOWN LIGHT MARKER 2

- Cree

Applications

- Recessed Luminairs LED Downlight
- High efficiency facets aluminium reflectors
- Wide Beam Angle
- Clear glass / frosted glass upon request
- Die-cast aluminum mounting ring, with system to fix it to the false ceiling using steel springs
- Die-cast heat sink with passive cooling
- Luminaires are equipped with electronic driver or with dimmable electronic driver on request
- IP34

Product Code	GM-CR18DR-W30	GM-CR18DR-N40	GM-CR18DR-C50
Power(W)	40	40	40
Voltage(V)	110-240	110-240	110-240
DC(mA)	840	840	840
CCT(K)	3000	4000	4000
CRI	80	75	75
Beam Angle(°)	75/125	75/125	75/125
Hot Lumen(lm)	2430	2830	3020
Power Factor	>0.95	>0.95	>0.95
Rated Life(°C)	-30~40	-30~40	-30~40
CTN(PCS)	8	8	8

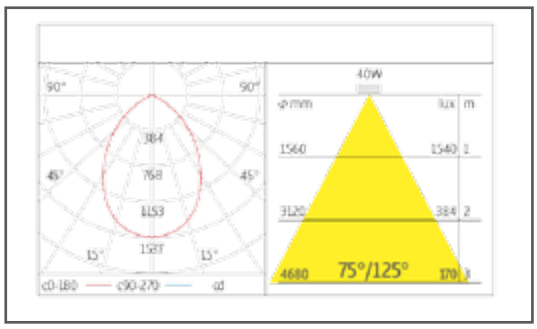

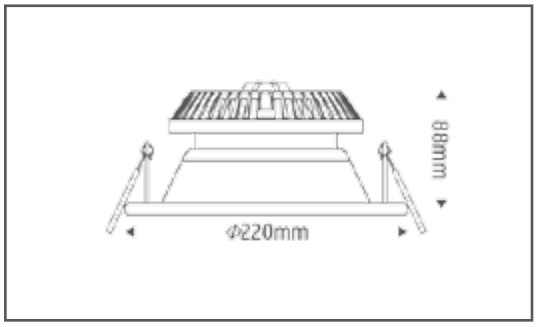

- ϕ205mm (cut out)

MERKUR LED DOWN LIGHT ARIO

- Samsung, LG

Applications

ARIO

- Professional recessed fixture for low-power LED ARRAY consisting of die-cast aluminium finned heat dissipation system, within which is housed the extra pure aluminium faceted optic.
- The primary optical system is positioned with a tilt of 31° from the vertical and is equipped with an asymmetrical fresnel filter to give a very even, highly efficient, wall washer effect on the wall. Another secondary aluminium optic guarantees maximu m visual comfort.
- Die-cast aluminium ring with system to fix it to the false ceiling using steel springs.

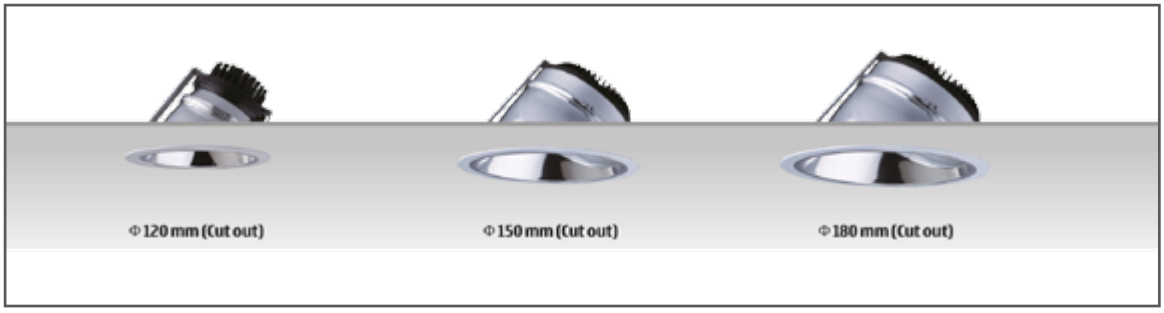

MERKUR LED DOWN LIGHT ARIO-1

- Samsung, LG

Applications

- Asymmetric Recessed Luminairs LED Down light
- High efficiency aluminium reflectors
- Wide Beam Angle
- Fresnel lens
- Die-cast aluminum mounting ring, with system to fix it to the false ceiling using steel springs
- Die-cast heat sink with passive cooling
- Luminaires are equipped with electronic driver or with dimmable electronic driver on request
- Steel bracketst
- IP40

Product Code	GM-SAM6105LED-W30	GM-SAM6105LED-N40	GM-SAM6105LED-C50
Power(W)	12	12	12
Voltage(V)	110-240	110-240	110-240
DC(mA)	350	350	350
CCT(K)	3000	4000	5000
CRI	80	80	80
Beam Angle(°)	65/105	65/105	65/105
Hot Lumen(lm)	830	850	860
Power Factor	>0.5	>0.5	>0.5
Rated Life(°C)	-30~40	-30~40	-30~40
CTN(PCS)	12	12	12

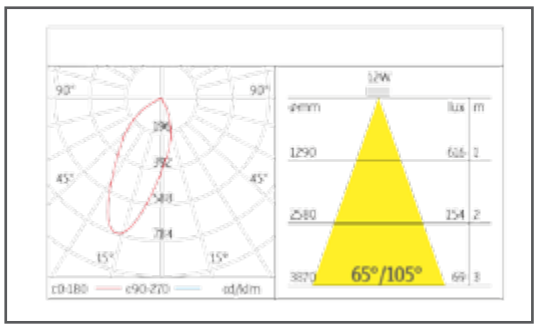

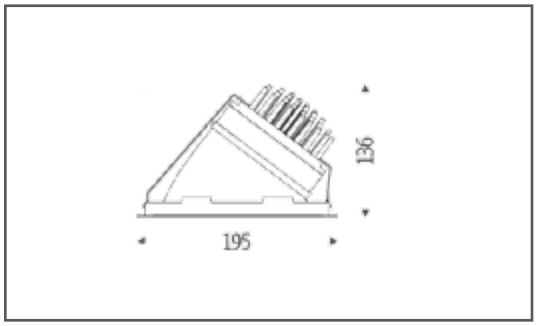

- 185mm (cut out)

MERKUR LED DOWN LIGHT ARIO - 2

- Samsung, LG

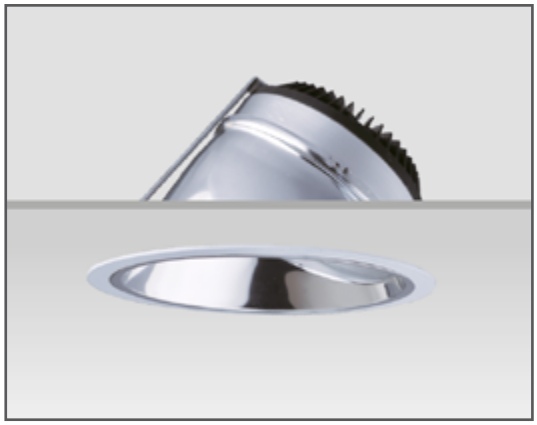

Applications

- Asymmetric Recessed Luminairs LED Down light
- High efficiency aluminium reflectors
- Wide Beam Angle
- Fresnel lens
- Die-cast aluminum mounting ring, with system to fix it to the false ceiling using steel springs
- Die-cast heat sink with passive cooling
- Luminaires are equipped with electronic driver or with dimmable electronic driver on request
- Steel bracketst
- IP40

Product Code	GM-SAM8037LED-W30	GM-SAM8037LED-N40	GM-SAM8037LED-C50
Power(W)	16	16	16
Voltage(V)	100-240	100-240	100-240
DC(mA)	350	350	350
CCT(K)	3000	4000	5000
CRI	80	80	80
Beam Angle(°)	70/100	70/100	70/100
Hot Lumen(lm)	1170	1190	1210
Power Factor	>0.5	>0.5	>0.5
Rated Life(°C)	-30~40	-30~40	-30~40
CTN(PCS)	12	12	12

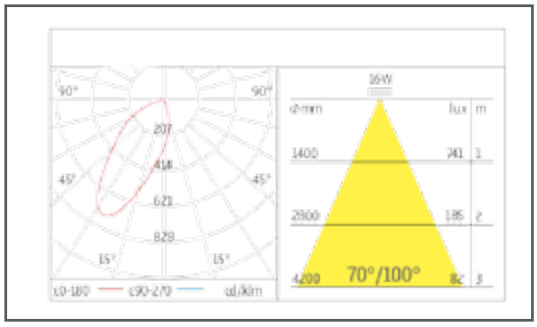

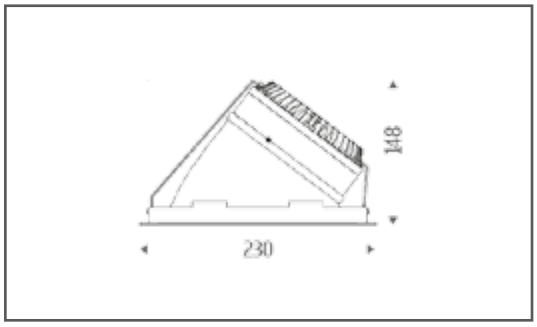

- ϕ215mm (cut out)

MERKUR LED DOWN LIGHT ARIO - 3

- Samsung, LG

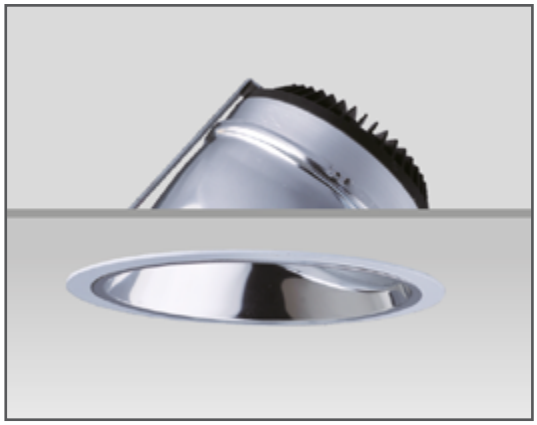

Applications

- Asymmetric Recessed Luminairs LED Downlight
- High efficiency aluminium reflectors
- Wide Beam Angle
- Fresnel lens
- Die-cast aluminum mounting ring, with system to fix it to the false ceiling using steel springs
- Die-cast heat sink with passive cooling
- Luminaires are equipped with electronic driver or with dimmable electronic driver on request
- Steel bracketst
- IP40

Product Code	GM-SAM9020LED-W30	GM-SAM9020LED-N40	GM-SAM9020LED-C50
Power(W)	20	20	20
Voltage(V)	100-240	100-240	100-240
DC(mA)	500	500	500
CCT(K)	3000	3000	3000
CRI	80	80	80
Beam Angle(°)	75/110	75/110	75/110
Hot Lumen(lm)	1560	1580	1620
Power Factor	>0.95	>0.95	>0.95
Rated Life(°C)	-30~40	-30~40	-30~40
CTN(PCS)	8	8	8

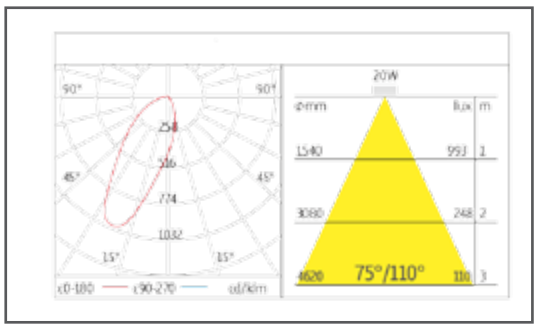

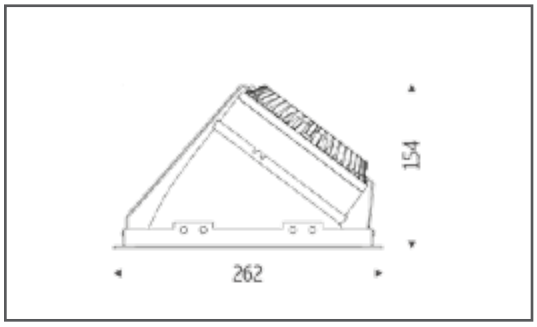

- ϕ248mm (cut out)

MERKUR LED DOWN LIGHT FLAMINGO

- Cree Xlamp XT-E LEDs

Applications

- FLAMINGO - Adjustable recessed fixture for high-power LED ARRAY which can be pulled out up to 90° on the desired target.

Thanks to a system consisting of 1 metal ring which fix to the die cast ring and allow a 358° rotation.

MERKUR LED DOWN LIGHT FLAMINGO

- Samsung, LG

Applications

- Adjustable Recessed Luminairs LED Downlight
- Multi-pmma module lens
- Aluminum die cast mounting ring with system to fix it to the false ceiling using steel springs
- Aluminium heat fins with passive cooling
- Luminaires are equipped with electronic driver or with dimmable electronic driver on request
- Pull out to 90°
- IP40

Product Code	GM-CR236LED-W30	GM-CR236LED-N40	GM-CR236LED-C55
Power(W)	35	35	35
Voltage(V)	100-240	100-240	100-240
DC(mA)	1000	1000	1000
CCT(K)	3000	4000	5000
CRI	80	70	70
Beam Angle(°)	35/60	35/60	35/60
Hot Lumen(lm)	1980	2110	2570
Power Factor	>0.95	>0.95	>0.95
Rated Life(°C)	-30~40	-30~40	-30~40
CTN(PCS)	12	12	12

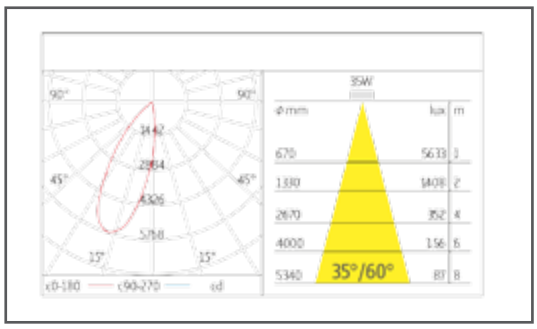

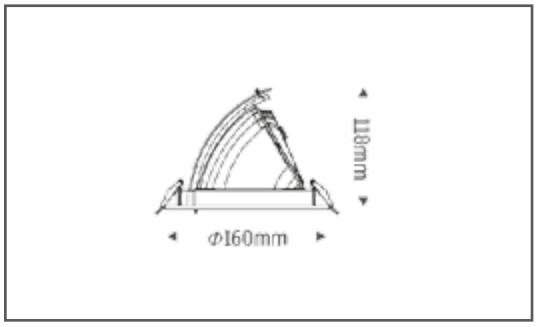

- ϕ150mm (cut out)

MERKUR LED DOWN LIGHT FLAMINGO

- Samsung, LG

Applications

- Adjustable Recessed Luminairs LED Downlight
- Multi-polycarbonate module lens
- Aluminium die cast mounting ring with system to fix it to the false ceiling using steel springs
- Aluminium heat fins with passive cooling
- Luminaires are equipped with electronic driver or with dimmable electronic driver on request
- Pull out to 80°
- IP40

Product Code	GM-CR237LED-W30	GM-CR237LED-N40	GM-CR237LED-C55
Power(W)	43	43	43
Voltage(V)	100-240	100-240	100-240
DC(mA)	1000	1000	1000
CCT(K)	3000	4000	5500
CRI	80	70	70
Beam Angle(°)	35/65	35/65	35/65
Hot Lumen(lm)	2630	2810	3550
Power Factor	>0.95	>0.95	>0.95
Rated Life(°C)	-30~40	-30~40	-30~40
CTN(PCS)	12	12	12

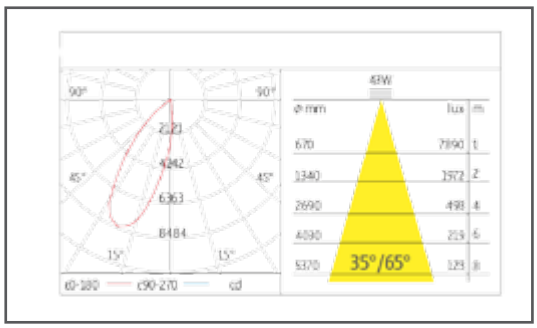

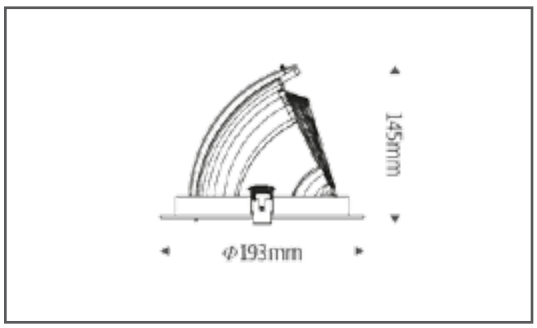

- ϕ150mm (cut out)

MERKUR LED DOWN LIGHT FLAMINGO AD

- Cree Xlamp XT-E LEDs

Applications

- FLAMINGO AD – Adjustable recessed fixture for high-power LED ARRAY which can be pulled out up to 90° on the desired target.
Thanks to a system consisting of 1 metal ring which fix to the die cast ring and allow a 358° rotation.

MERKUR LED DOWN LIGHT FLAMINGO AD

- Samsung, LG

Applications

- Adjustable Recessed Luminairs LED Downlight
- Multi-pmma module lens
- Aluminium die cast mounting ring with system to fix it to the false ceiling using steel springs
- Aluminium heat fins with passive cooling
- Luminaires are equipped with electronic driver or with dimmable electronic driver on request
- Pull out to 90°
- IP40

Product Code	GM-CR236BLED-W30	GM-CR236BLED-N40	GM-CR236BLED-C50
Power(W)	35	35	35
Voltage(V)	100-240	100-240	100-240
DC(mA)	1000	1000	1000
CCT(K)	3000	4000	5000
CRI	80	80	80
Beam Angle(°)	35/60	35/60	35/60
Hot Lumen(lm)	1980	2110	2570
Power Factor	>0.95	>0.95	>0.95
Rated Life(°C)	-30~40	-30~40	-30~40
CTN(PCS)	12	12	12

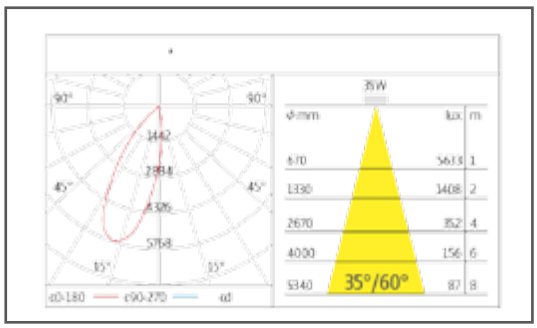

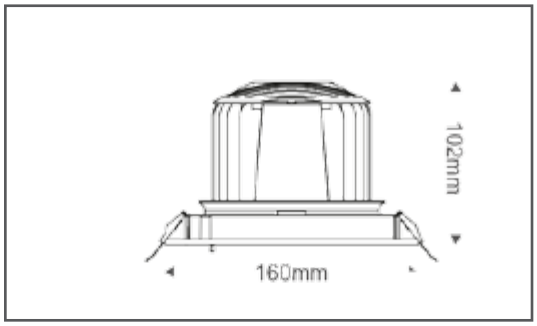

- ϕ150mm (cut out)

MERKUR LED DOWN LIGHT FLAMINGO AD2

- Samsung, LG

Applications

- Adjustable Recessed Luminairs LED Downlight
- Multi-pmma module lens
- Aluminium die cast mounting ring with system to fix it to the false ceiling using steel springs
- Aluminium heat fins with passive cooling
- Luminaires are equipped with electronic driver or with dimmable electronic driver on request
- Pull out to 90°
- IP40

Product Code	GM-CR237BLED-W30	GM-CR237BLED-N40	GM-CR237BLED-C50
Power(W)	43	43	43
Voltage(V)	100-240	100-240	100-240
DC(mA)	1000	1000	1000
CCT(K)	3000	4000	5000
CRI	80	80	80
Beam Angle(°)	35/65	35/65	35/65
Hot Lumen(lm)	2360	2810	3550
Power Factor	>0.95	>0.95	>0.95
Rated Life(°C)	-30~40	-30~40	-30~40
CTN(PCS)	8	8	8

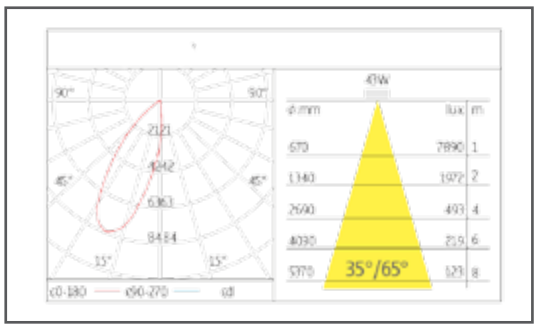

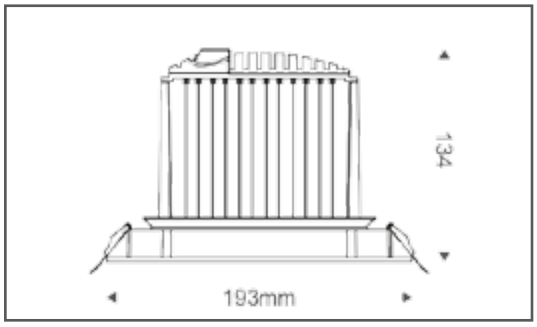

- ϕ180mm (cut out)

MERKUR LED DOWN LIGHT FLAMINGO AD

- Cree Xlamp XT-E LEDs

Applications

- FLAMINGO RT -- Adjustable recessed fixture for high-power LED ARRAY which can be pulled out up to 80° on the desired target. Thanks to a lens module system consisting of 12 cavity of lens

MERKUR LED DOWN LIGHT FLAMINGO RT

- Samsung, LG

Applications

- Adjustable Recessed Luminairs LED Downlight
- Multi-pmma module lens
- Aluminium die cast mounting ring with system to fix it to the false ceiling using steel springs
- Aluminium heat fins with passive cooling
- Luminaires are equipped with electronic driver or with dimmable electronic driver on request
- Pull out to 90°
- IP40

Product Code	GM-CR237BLED-W30	GM-CR237BLED-N40	GM-CR237BLED-C50
Power(W)	43	43	43
Voltage(V)	100-240	100-240	100-240
DC(mA)	1000	1000	1000
CCT(K)	3000	4000	5000
CRI	80	80	80
Beam Angle(°)	35/65	35/65	35/65
Hot Lumen(lm)	2360	2810	3550
Power Factor	>0.95	>0.95	>0.95
Rated Life(°C)	-30~40	-30~40	-30~40
CTN(PCS)	8	8	8

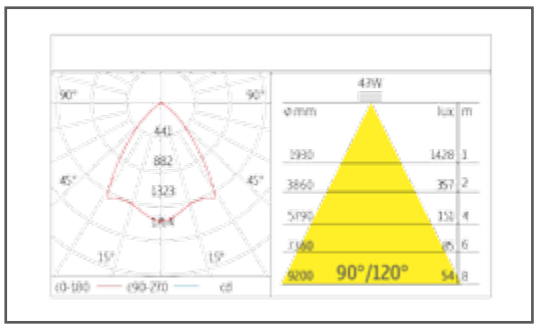

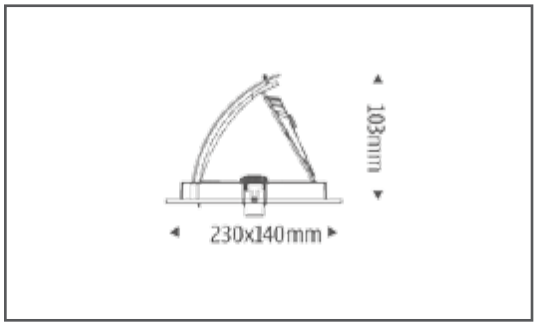

- ϕ220x130mm (cut out)

MERKUR LED DOWN LIGHT BOXY

- Samsung, LG

Applications

- Boxy is desined for non-roof ceiling. the range capable of delivering light output similar to that of conventional CFL lamps. The housing is made out of aluminium with powder coated. The design encompasses low-power LED SMT technology and an electronic power supply. An opal diffuser provides good light transmission, uniformity, and glare control.
- IP40

MERKUR LED DOWN LIGHT BOXY - 1

- Samsung, LG

Applications

- Ad-Surface mounted Luminairs with low power SMT LED
- Fresnel lens
- Aluminum housing
- Aluminium heat sink with passive cooling inside-Luminaires are equiped with electronic driver or with dimmable electronic driver on request
- IP44

Product Code	GM-DL104SAM-W30	GM-DL104SAM-N40	GM-DL104SAM-C50
Power(W)	10	10	10
Voltage(V)	100-240	100-240	100-240
DC(mA)	350	350	350
CCT(K)	3000	4000	5000
CRI	80	75	75
Beam Angle(°)	80/135	80/135	80/135
Hot Lumen(lm)	710	730	760
Power Factor	>0.5	>0.5	>0.5
Rated Life(°C)	-30~40	-30~40	-30~40
CTN(PCS)	12	12	12

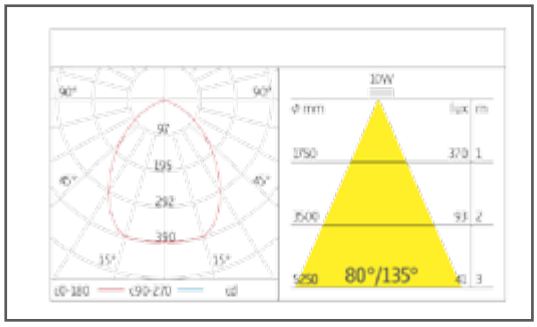

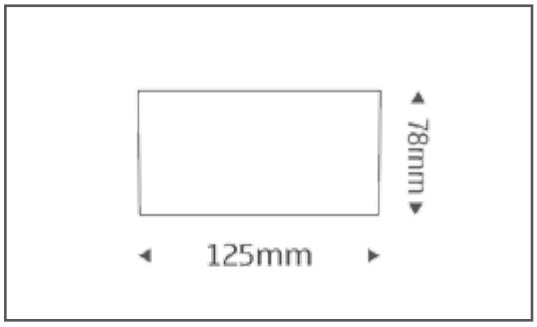

MERKUR LED DOWN LIGHT BOXY - 2

- Samsung, LG

Applications

- Adjustable Recessed Luminairs LED Downlight
- Multi-pmma module lens
- Aluminium die cast mounting ring with system to fix it to the false ceiling using steel springs
- Aluminium heat fins with passive cooling
- Luminaires are equipped with electronic driver or with dimmable electronic driver on request
- Pull out to 90°
- IP44

Product Code	GM-DL125SAM-W30	GM-DL125SAM-N40	GM-DL125SAM-C50
Power(W)	12	12	12
Voltage(V)	100-240	100-240	100-240
DC(mA)	350	350	350
CCT(K)	3000	4000	5000
CRI	80	75	75
Beam Angle(°)	70/130	70/130	70/130
Hot Lumen(lm)	960	980	1020
Power Factor	>0.5	>0.5	>0.5
Rated Life(°C)	-30~40	-30~40	-30~40
CTN(PCS)	12	12	12

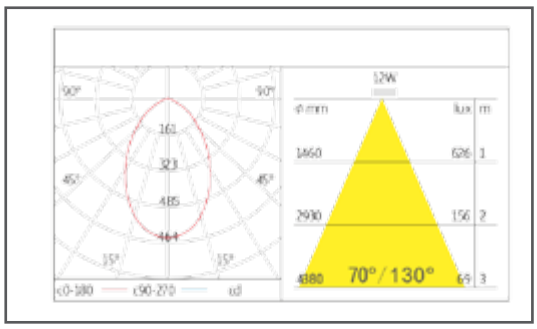

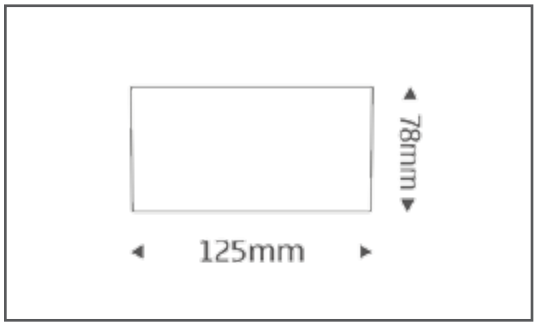

MERKUR LED DOWN LIGHT BOXY - 3

- Samsung, LG

Applications

- Surface mounted Luminairs with low power SMT LED
- Fresnel lens
- Aluminum housing
- Aluminium heat sink with passive cooling inside
- Luminaires are equiped with electronic driver or with dimmable electronic driver on request
- IP44

Product Code	HN-DL155SAM-W30	HN-DL155SAM-N40	HN-DL155SAM-C50
Power(W)	16	16	16
Voltage(V)	100-240	100-240	100-240
DC(mA)	350	350	350
CCT(K)	3000	4000	5000
CRI	80	75	75
Beam Angle(°)	75/130	75/130	75/130
Hot Lumen(lm)	1220	1240	1280
Power Factor	>0.5	>0.5	>0.5
Rated Life(°C)	-30~40	-30~40	-30~40
CTN(PCS)	12	12	12

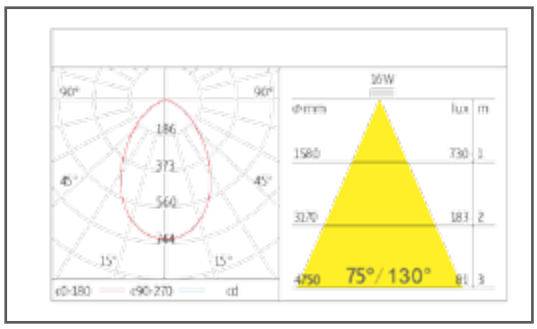

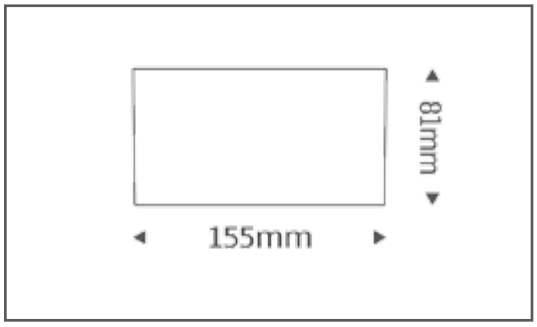

MERKUR LED DOWN LIGHT BOXY - 4

- Samsung, LG

Applications

- Surface mounted Luminairs with low power SMT LED
- Fresnel lens
- Aluminum housing
- Aluminium heat sink with passive cooling inside
- Luminaires are equiped with electronic driver or with dimmable electronic driver on request
- IP44

Product Code	HN-DL186SAM-W30	HN-DL186SAM-N40	HN-DL186SAM-C50
Power(W)	20	20	25
Voltage(V)	100-240	100-240	100-240
DC(mA)	500	500	500
CCT(K)	3000	4000	5000
CRI	80	75	75
Beam Angle(°)	70/125	70/125	70/125
Hot Lumen(lm)	1810	1840	1890
Power Factor	>0.95	>0.95	>0.5
Rated Life(°C)	-30~40	-30~40	-30~40
CTN(PCS)	12	12	12

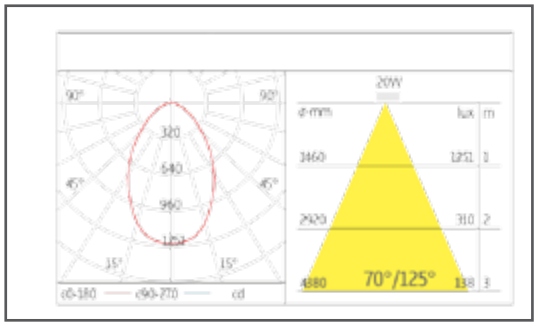

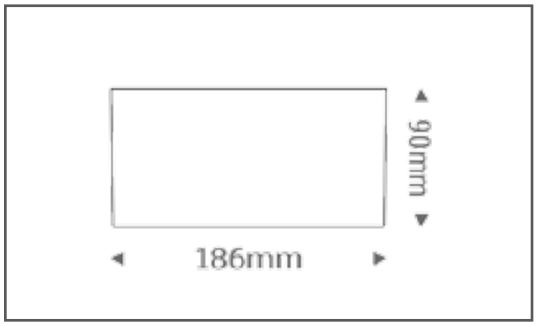

MERKUR LED DOWN LIGHT BOXY - 5

- Samsung, LG

Applications

- Surface mounted Luminairs with low power SMT LED
- Fresnel lens
- Aluminum housing
- Aluminium heat sink with passive cooling inside
- Luminaires are equiped with electronic driver or with dimmable electronic driver on request
- IP44

Product Code	HN-DL231SAM-W30	HN-DL231SAM-N40	HN-DL231SAM-C50
Power(W)	30	30	30
Voltage(V)	100-240	100-240	100-240
DC(mA)	700	700	700
CCT(K)	3000	4000	5000
CRI	80	80	80
Beam Angle(°)	100/135	100/135	100/135
Hot Lumen(lm)	2550	2580	2600
Power Factor	>0.95	>0.95	>0.95
Rated Life(°C)	-30~40	-30~40	-30~40
CTN(PCS)	8	8	8

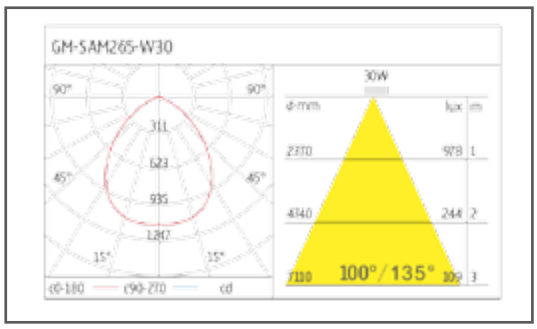

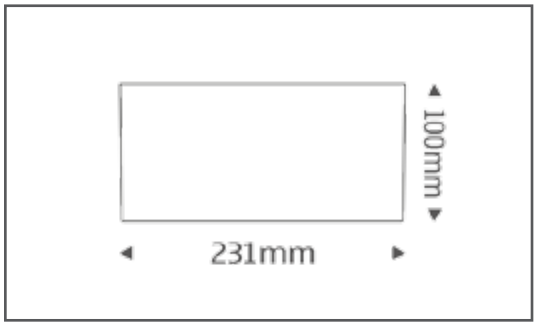

MERKUR LED DOWN LIGHT BOXY - 6

- Samsung, LG

Applications

- Surface mounted Luminairs with low power SMT LED
- Fresnel lens
- Aluminum housing
- Aluminium heat sink with passive cooling inside
- Luminaires are equiped with electronic driver or with dimmable electronic driver on request
- IP44

Product Code	HN-DL286SAM-W30	HN-DL286SAM-N40	HN-DL286SAM-C50
Power(W)	35	35	35
Voltage(V)	100-240	100-240	100-240
DC(mA)	700	700	700
CCT(K)	3000	4000	5000
CRI	80	80	80
Beam Angle(°)	100/140	100/140	100/140
Hot Lumen(lm)	3180	3200	3230
Power Factor	>0.95	>0.95	>0.5
Rated Life(°C)	-30~40	-30~40	-30~40
CTN(PCS)	4	4	4

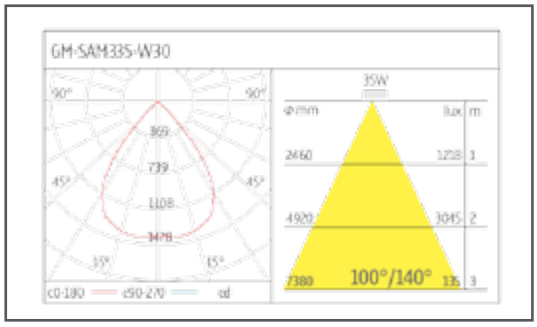

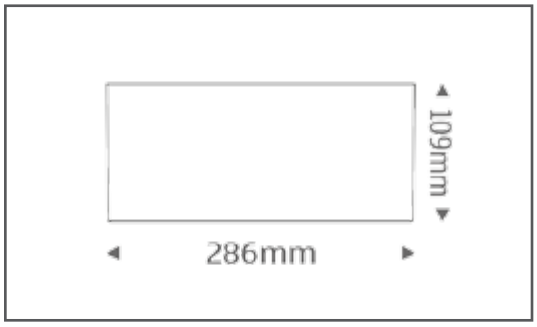

LED DOWN LIGHT MODULE 10, 16

- Samsung, LG

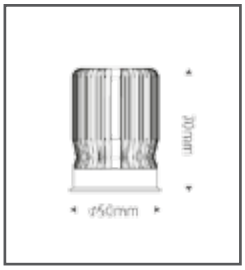

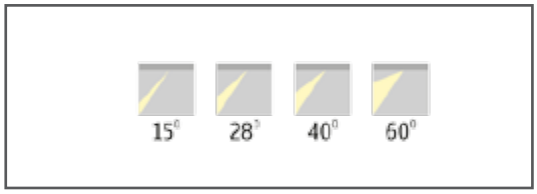

Applications

- True Retrofit Replacement of 50W / 75W MR16 Halogen replacement
- High Efficiency Faceted Aluminium Reflector to provide Excellent Visual Comfort and same Sparkling effect as Halogens
- Heat Sink Made up of Die Cast Aluminium to provide Passive cooling
- Dimmable Electronic Driver suitable for dimming with Universal / Leading Edge / Trai ling Edge / C-Bas dimming system
- No Need for Halogen Electronic Transformer with this Module
- IP44

Product Code	HN-CR10-W30	HN-CR10-N40	HN-CR10-C50
Power(W)	7	7	7
Voltage(V)	220-240	220-240	220-240
DC(mA)	180	180	180
CCT(K)	3000	4000	5000
CRI	80	80	80
Beam Angle(°)	40/85	40/85	40/85
Hot Lumen(lm)	610	640	670
Power Factor	>0.9	>0.9	>0.9
Rated Life(°C)	-30~40	-30~40	-30~40
CTN(PCS)	12	12	12

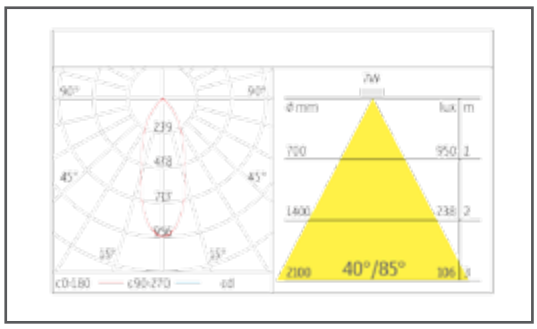

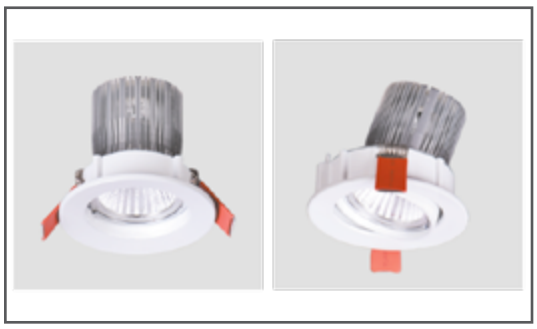

LED DOWN LIGHT MODULE 10, 16

- Samsung, LG

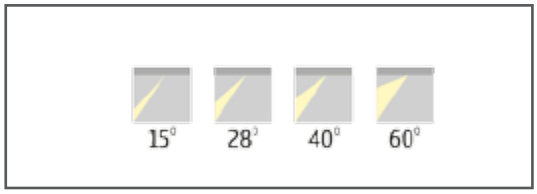

Applications

- True Retrofit Replacement of 50W / 75W MR16 Halogen replacement
- High Efficiency Faceted Aluminium Reflector to provide Excellent Visual Comfort and same Sparkling effect as Halogens
- Heat Sink Made up of Die Cast Aluminium to provide Passive cooling
- Dimmable Electronic Driver suitable for dimming with Universal / Leading Edge / Trai ling Edge / C-Bas dimming system
- No Need for Halogen Electronic Transformer with this Module
- IP44

Product Code	HN-CR50-W30	HN-CR50-N40	HN-CR50-C50
Power(W)	12	12	12
Voltage(V)	220-240	220-240	220-240
DC(mA)	250	250	250
CCT(K)	3000	4000	5000
CRI	80	80	80
Beam Angle(°)	40/85	40/85	40/85
Hot Lumen(lm)	750	770	780
Power Factor	>0.9	>0.9	>0.9
Rated Life(°C)	-30~40	-30~40	-30~40
CTN(PCS)	12	12	12

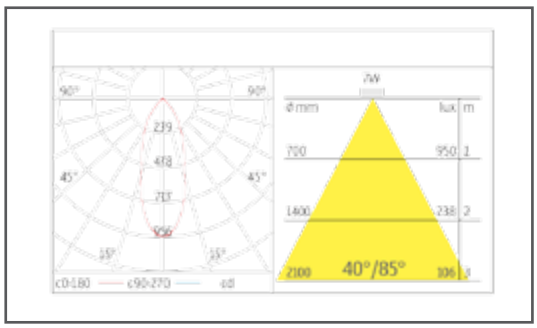

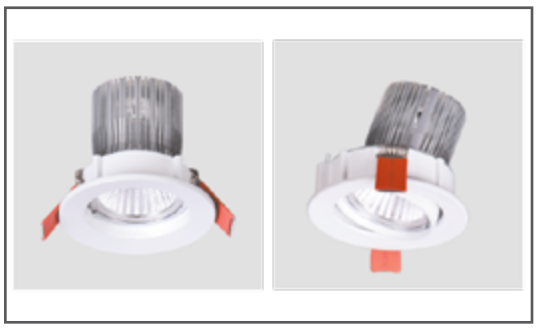

LED DOWN LIGHT ECO iSPOT

- CreeXlamp XB-D EasyWhite LEDs

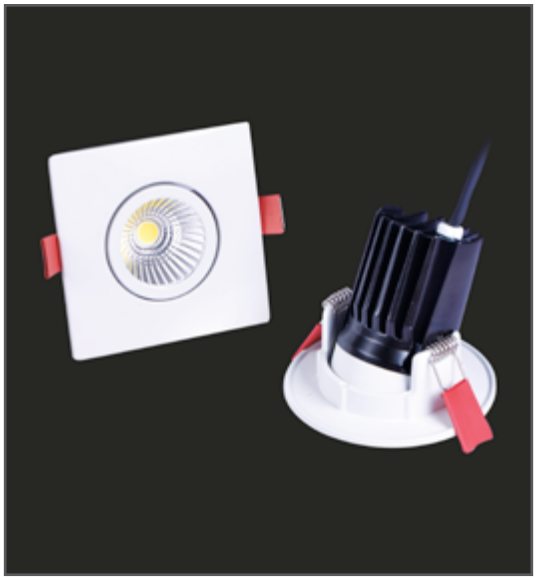

Applications

- Adjustable round fixture is a compact, flexible and quality spotlight with an excellent light output. It is designed with lastest generation high power COB LED chip. The single, anti glare light source design ensures a uniformity light wihtout multiple shadows. This series is the ideal solution for replacement halogen dichroic lamp of 50W. They are supplied with a seperate dimmable or non-dimmable driver with easy connect terminals and are suitable for dimming with most trailing edge dimmers The fixture is available with either 90 mm or 110 mm diameter ring. This fixture can be tilt upto 25 degree of vertical to direct the light on the desired target.

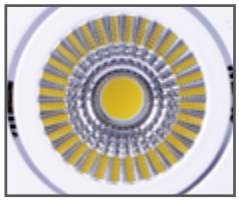

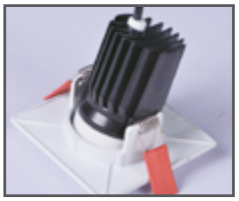

LED DOWN LIGHT ECO iSPOT

- Samsung, LG

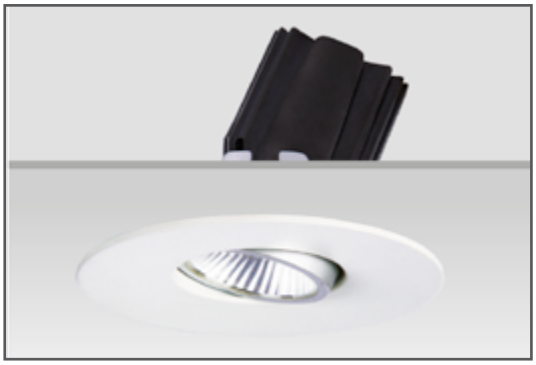

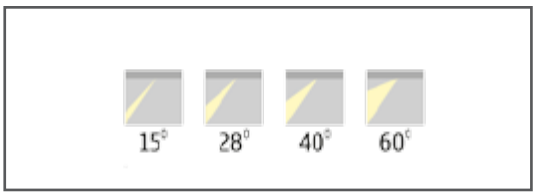

Applications

- Adjustable Recessed Luminairs LED Downlight
- Anti-glare polycarbonate lens
- Aluminum mounting ring with system to fix it to the false ceiling using steel springs
- Aluminium heat sink with passive cooling
- Luminaires are equipped with electronic driver or with dimmable electronic driver on request
- IP40
- white, gray, black

Product Code	HN-CR90R-BK-W30	HN-CR90R-BK-N40	HN-CR90R-BK-N40
Power(W)	12	12	12
Voltage(V)	220-240	220-240	220-240
DC(mA)	250	250	250
CCT(K)	3000	4000	5000
CRI	80	80	80
Beam Angle(°)	40/80	40/80	40/80
Hot Lumen(lm)	740	760	780
Power Factor	>0.9	>0.9	>0.9
Rated Life(°C)	-30~40	-30~40	-30~40
CTN(PCS)	12	12	12

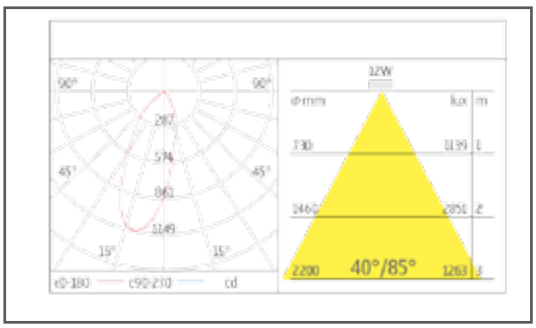

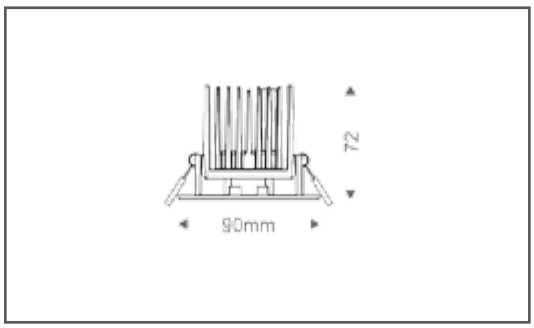

- ϕ75mm (cut out)

LED DOWN LIGHT ECO iSPOT 2

- Samsung, LG

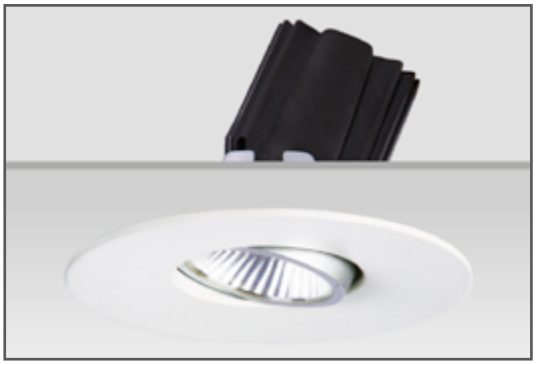

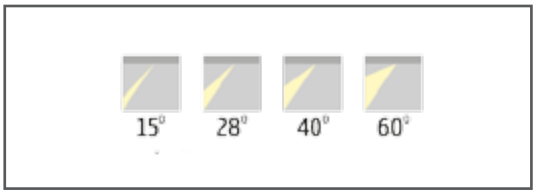

Applications

- Adjustable Recessed Luminairs LED Downlight
- Anti-glare polycarbonate lens
- Aluminum mounting ring with system to fix it to the false ceiling using steel springs
- Aluminium heat sink with passive cooling
- Luminaires are equipped with electronic driver or with dimmable electronic driver on request
- IP40
- white, gray, black

Product Code	HN-CR110R-BK-W30	HN-CR110R-BK-N40	HN-CR110R-BK-C50
Power(W)	12	12	12
Voltage(V)	220-240	220-240	220-240
DC(mA)	250	250	250
CCT(K)	3000	4000	5000
CRI	80	80	80
Beam Angle(°)	40/80	40/80	40/80
Hot Lumen(lm)	740	760	780
Power Factor	>0.9	>0.9	>0.9
Rated Life(°C)	-30~40	-30~40	-30~40
CTN(PCS)	12	12	12

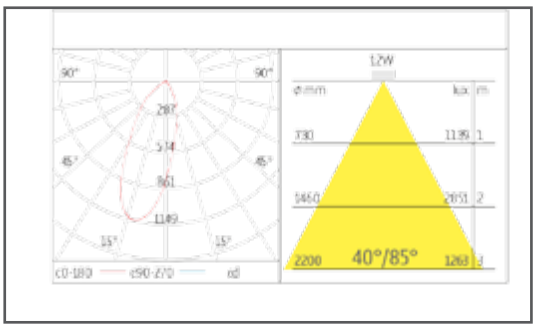

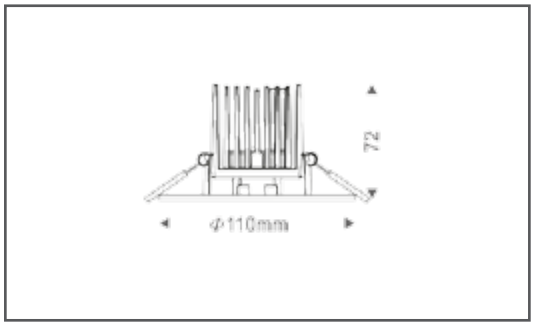

- ϕ75mm (cut out)

LED DOWN LIGHT ECO iSPOT 3

- Samsung, LG

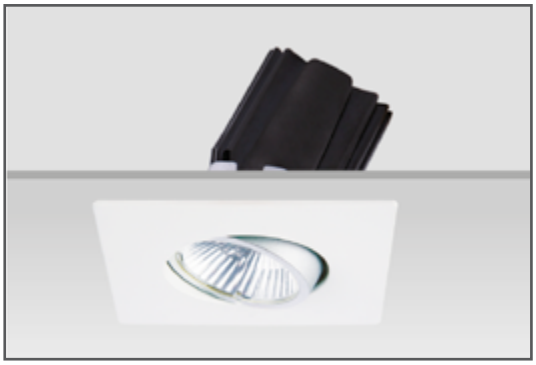

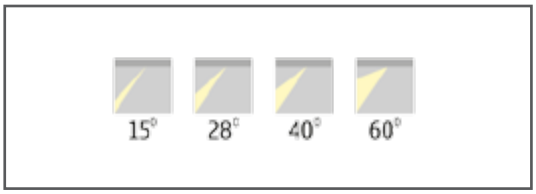

Applications

- Adjustable Recessed Luminairs LED Downlight
- Anti-glare polycarbonate lens
- Aluminum mounting ring with system to fix it to the false ceiling using steel springs
- Aluminium heat sink with passive cooling
- Luminaires are equipped with electronic driver or with dimmable electronic driver on request
- IP40
- white, gray, black

Product Code	HN-CR90S-BK-W30	HN-CR90S-BK-N40	HN-CR90S-BK-C50
Power(W)	12	12	12
Voltage(V)	220-240	220-240	220-240
DC(mA)	250	250	250
CCT(K)	3000	4000	5000
CRI	80	80	80
Beam Angle(°)	40/80	40/80	40/80
Hot Lumen(lm)	740	760	780
Power Factor	>0.9	>0.9	>0.9
Rated Life(°C)	-30~40	-30~40	-30~40
CTN(PCS)	12	12	12

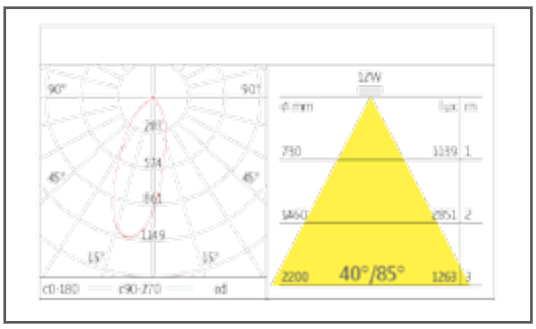

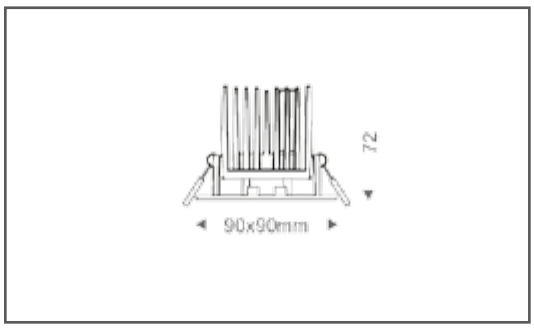

- ϕ75mm (cut out)

LED DOWN LIGHT ECO iSPOT 4

- Samsung, LG

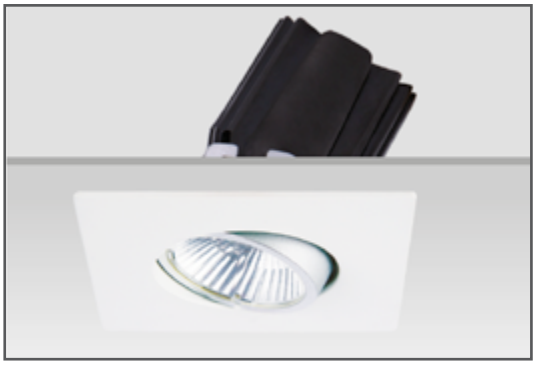

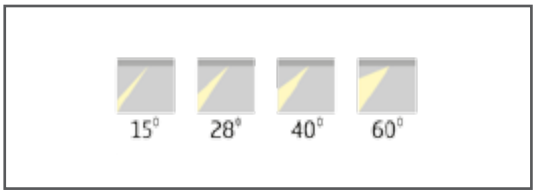

Applications

- Adjustable Recessed Luminairs LED Downlight
- Anti-glare polycarbonate lens
- Aluminum mounting ring with system to fix it to the false ceiling using steel springs
- Aluminium heat sink with passive cooling
- Luminaires are equipped with electronic driver or with dimmable electronic driver on request
- IP40
- white, gray, black

Product Code	HN-CR110R-BK-W30	HN-CR110R-BK-N40	HN-CR110R-BK-C50
Power(W)	12	12	12
Voltage(V)	220-240	220-240	220-240
DC(mA)	250	250	250
CCT(K)	3000	4000	5000
CRI	80	80	80
Beam Angle(°)	40/80	40/80	40/80
Hot Lumen(lm)	740	760	780
Power Factor	>0.9	>0.9	>0.9
Rated Life(°C)	-30~40	-30~40	-30~40
CTN(PCS)	12	12	12

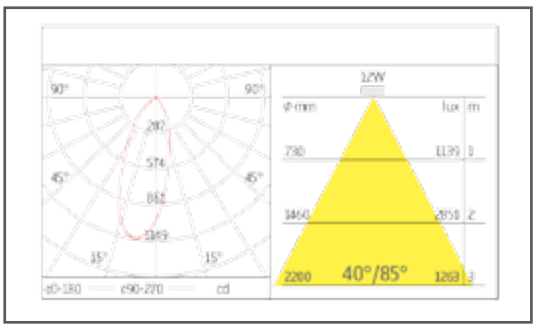

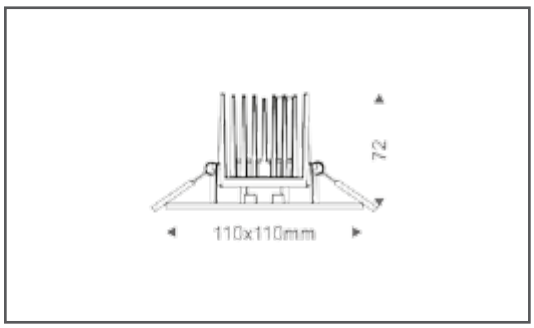

- ϕ75mm (cut out)

LED DOWN LIGHT iSPOT

- Cree Xlamp CXA COB LED

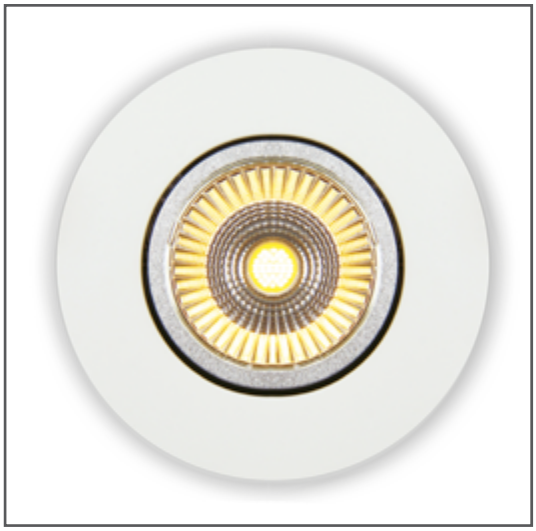

Applications

- iSPOT - Adjustable round fixture is a compact, flexible and quality spotlight with an excellent light output. It is designed with lastest generation high power COB LED chip.
  The single, anti glare light source design ensures a uniformity light wihtout multiple shadows. This series is the ideal solution for replacement halogen dichroic lamp of 50W. They are supplied with a seperate dimmable or non-dimmable driver with easy connect terminals and are suitable for dimming with most trailing edge dimmers.The fixture is available with either 90 mm or 110 mm diameter ring. This fixture can be tilt up to 25 degree of vertical to direct the light on the desired target.

LED DOWN LIGHT iSPOT1

- Samsung, LG

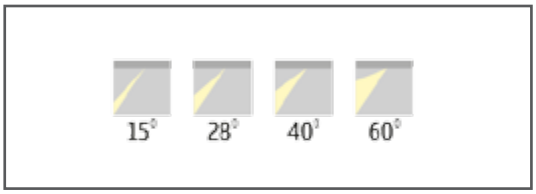

Applications

- Adjustable Recessed Luminairs LED Downlight
- Anti-glare polycarbonate lens
- Aluminum mounting ring with system to fix it to the false ceiling using steel springs
- Aluminium heat sink with passive cooling
- Luminaires are equipped with electronic driver or with dimmable electronic driver on request
- IP40
- white, gray, black

Product Code	HN-CR110R-BK-W30	HN-CR110R-BK-N40	HN-CR110R-BK-C50
Power(W)	12	12	12
Voltage(V)	220-240	220-240	220-240
DC(mA)	250	250	250
CCT(K)	3000	4000	5000
CRI	80	80	80
Beam Angle(°)	40/80	40/80	40/80
Hot Lumen(lm)	740	760	780
Power Factor	>0.9	>0.9	>0.9
Rated Life(°C)	-30~40	-30~40	-30~40
CTN(PCS)	12	12	12

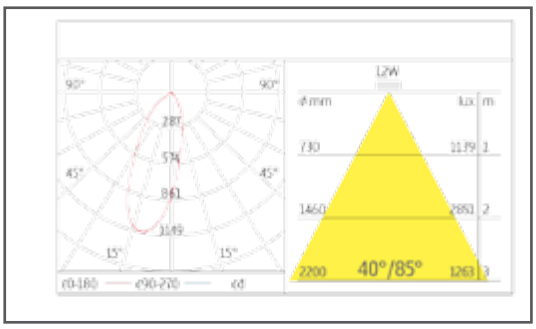

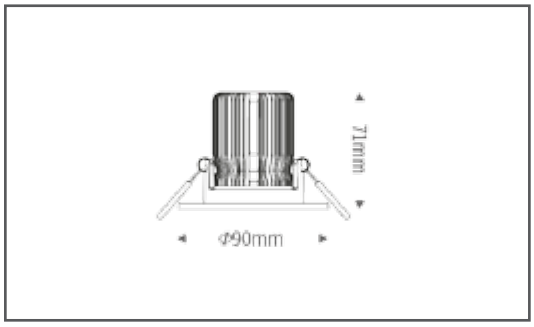

- ϕ75mm (cut out)

LED DOWN LIGHT iSPOT - 2

- Samsung, LG

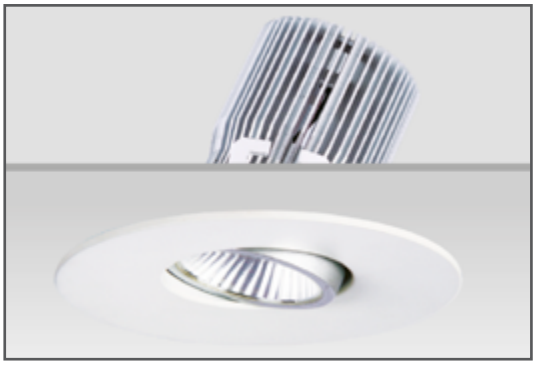

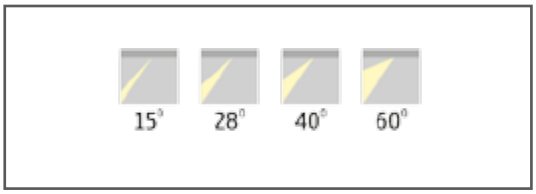

Applications

- Adjustable Recessed Luminairs LED Downlight
- Anti-glare polycarbonate lens
- Aluminum mounting ring with system to fix it to the false ceiling using steel springs
- Aluminium heat sink with passive cooling
- Luminaires are equipped with electronic driver or with dimmable electronic driver on request
- IP40
- white, gray, black

Product Code	HN-CR110R-W30	HN-CR110R-N40	HN-CR110R-C50
Power(W)	12	12	12
Voltage(V)	220-240	220-240	220-240
DC(mA)	250	250	250
CCT(K)	3000	4000	5000
CRI	80	80	80
Beam Angle(°)	40/80	40/80	40/80
Hot Lumen(lm)	740	760	780
Power Factor	>0.9	>0.9	>0.9
Rated Life(°C)	-30~40	-30~40	-30~40
CTN(PCS)	12	12	12

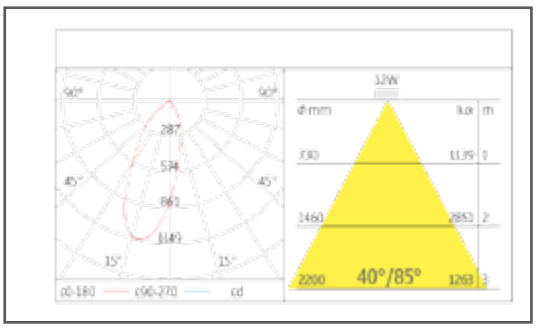

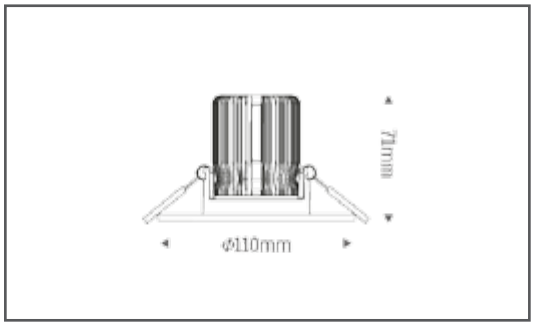

- ϕ75mm (cut out)

LED DOWN LIGHT iSPOT - 3

- Samsung, LG

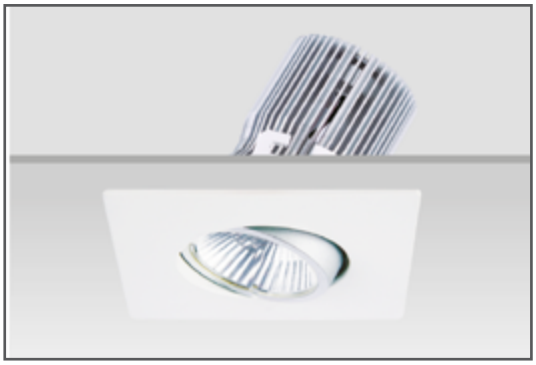

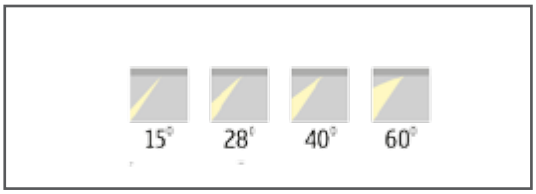

Applications

- Adjustable Recessed Luminairs LED Downlight
- Anti-glare polycarbonate lens
- Aluminum mounting ring with system to fix it to the false ceiling using steel springs
- Aluminium heat sink with passive cooling
- Luminaires are equipped with electronic driver or with dimmable electronic driver on request
- With round cut off
- IP40
- white, gray, black

Product Code	HN-CR110R-W30	HN-CR110R-N40	HN-CR110R-C50
Power(W)	12	12	12
Voltage(V)	220-240	220-240	220-240
DC(mA)	250	250	250
CCT(K)	3000	4000	5000
CRI	80	80	80
Beam Angle(°)	40/80	40/80	40/80
Hot Lumen(lm)	740	760	780
Power Factor	>0.9	>0.9	>0.9
Rated Life(°C)	-30~40	-30~40	-30~40
CTN(PCS)	12	12	12

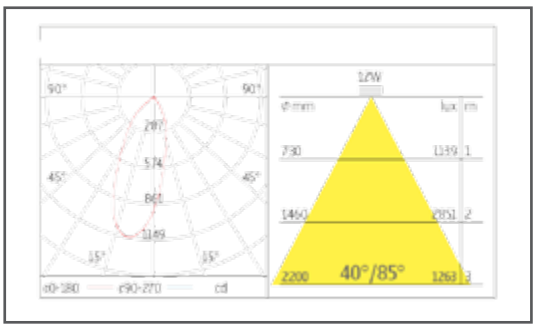

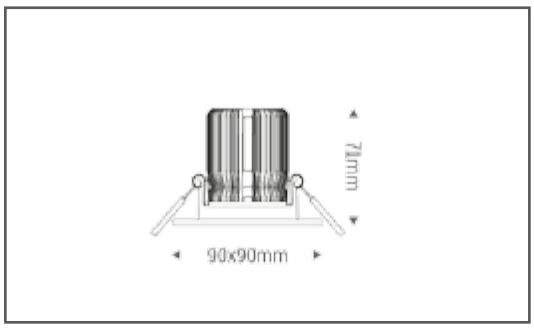

- ϕ75mm (cut out)

LED DOWN LIGHT iSPOT - 4

- Samsung, LG

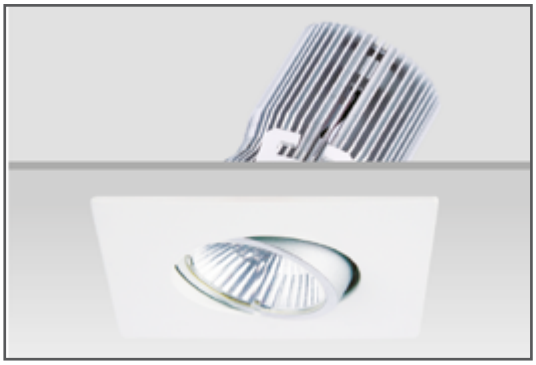

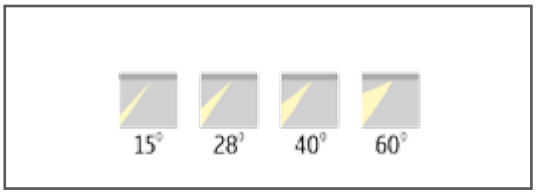

Applications

- Adjustable Recessed Luminairs LED Downlight
- Anti-glare polycarbonate lens
- Aluminum mounting ring with system to fix it to the false ceiling using steel springs
- Aluminium heat sink with passive cooling
- Luminaires are equipped with electronic driver or with dimmable electronic driver on request
- With round cut off
- IP40
- white, gray, black

Product Code	HN-CR110R-W30	HN-CR110R-N40	HN-CR110R-C50
Power(W)	12	12	12
Voltage(V)	220-240	220-240	220-240
DC(mA)	250	250	250
CCT(K)	3000	4000	5000
CRI	80	80	80
Beam Angle(°)	40/80	40/80	40/80
Hot Lumen(lm)	740	760	780
Power Factor	>0.9	>0.9	>0.9
Rated Life(°C)	-30~40	-30~40	-30~40
CTN(PCS)	12	12	12

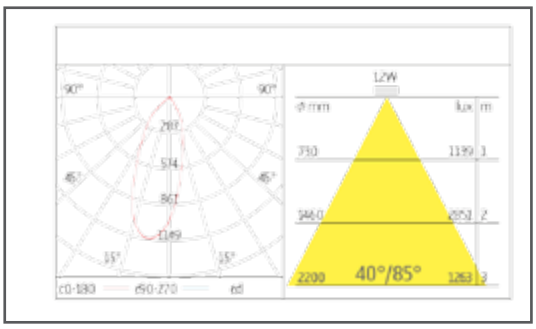

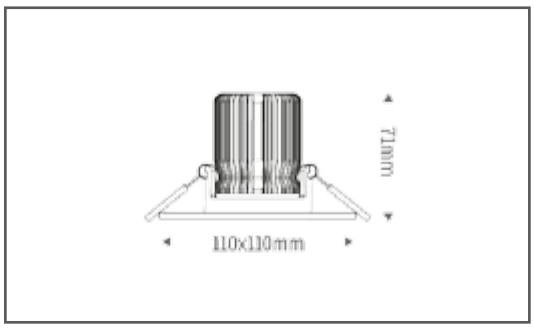

- ϕ75mm (cut out)

LED DOWN LIGHT ROTARY

- CreeXlamp XB-D EasyWhite LEDs

Applications

- Adjustable recessed fixture for high-power LED ARRAY with finned aluminium heat dissipater and spot optic in faceted aluminium die cast. Tempered closing glass which gives the product an IP40 rating. The fixture can be adjustable to an internal tilt 25° from the vertical. The fixture can be using three different beam angle reflectors for professional designer inquiry..

LED DOWN LIGHT ROTARY

- CreeXlamp XB-D EasyWhite LEDs

Applications

- Adjustable recessed fixture for high-power LED ARRAY with finned aluminium heat dissipater and spot optic in faceted aluminium die cast. Tempered closing glass which gives the product an IP40 rating. The fixture can be adjustable to an internal tilt 25° from the vertical. The fixture can be using three different beam angle reflectors for professional designer inquiry..

- Small Reflector System

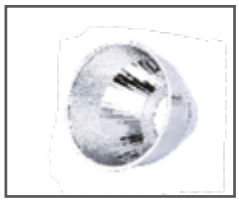

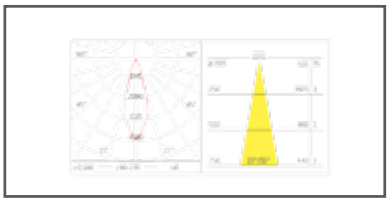

- Narrow-Reflector-1
- High efficiency reflector
- Angle:<10°-20°
- AL.Anodied Specular Siver Valley

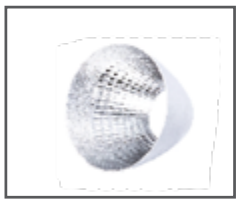

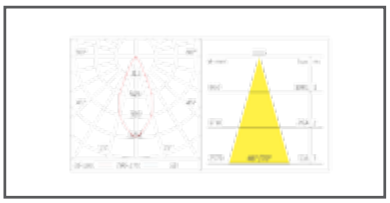

- Narrow-Reflector-2
- High efficiency reflector
- Angle:<30°-45°
- AL.Anodied Specular Siver Valley

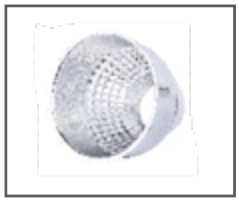

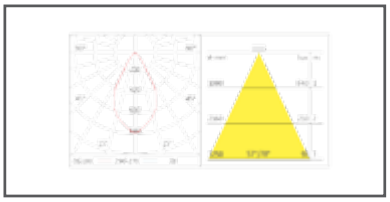

- Medium Reflector
- High efficiency reflector
- Angle:<45°-60°
- AL.Anodied Specular Siver Valley, Embossing

LED DOWN LIGHT ROTARY

- CreeXlamp XB-D EasyWhite LEDs

Applications

- Adjustable recessed fixture for high-power LED ARRAY with finned aluminium heat dissipater and spot optic in faceted aluminium die cast. Tempered closing glass which gives the product an IP40 rating. The fixture can be adjustable to an internal tilt 25° from the vertical. The fixture can be using three different beam angle reflectors for professional designer inquiry..

- LARGE Reflector System

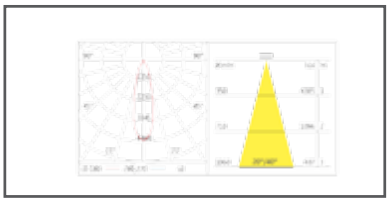

- Narrow-Reflector-1
- High efficiency reflector
- Angle:<10°-20°
- AL.Anodied Specular Siver Valley

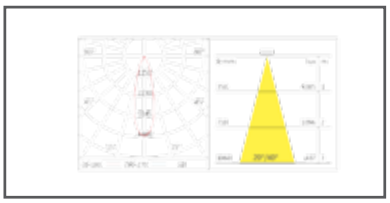

- Narrow-Reflector-2
- High efficiency reflector
- Angle:<20°-30°
- AL.Anodied Specular Siver Valley, Embossing

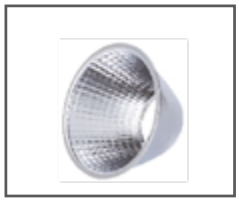

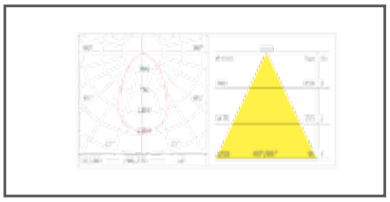

- Medium Reflector
- High efficiency reflector
- Angle:Over>-20°
- AL.Anodied Specular Siver Valley, Embossing

LED DOWN LIGHT ROTARY

- Samsung, LG

Applications

- Adjustable Recessed Luminairs LED Downlight
- With three beam angle of high efficiency facets aluminium reflectors
- Clear glass
- Aluminum mounting ring, with system to fix it to the false ceiling using steel springs
- Die-cast heat sink with passive cooling
- Luminaires are equipped with electronic driver or with dimmable electronic driver on reques
- IP40
- white, gray, black

Product Code	HN-FL7R-W30	HN-FL7R-N40	HN-FL7R-C50
Power(W)	12	12	12
Voltage(V)	220-240	110-240	110-240
DC(mA)	250	250	250
CCT(K)	3000	4000	5000
CRI	80	80	80
Beam Angle(°)	55/80	55/80	55/80
Hot Lumen(lm)	670	700	750
Power Factor	>0.5	>0.5	>0.5
Rated Life(°C)	-30~40	-30~40	-30~40
CTN(PCS)	12	12	12

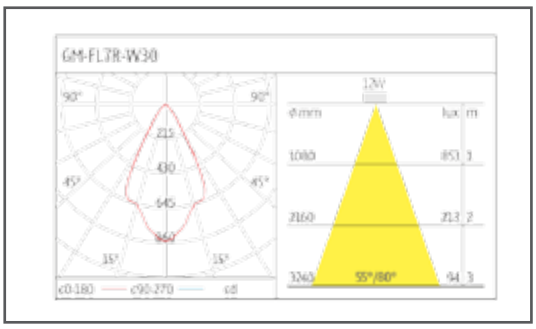

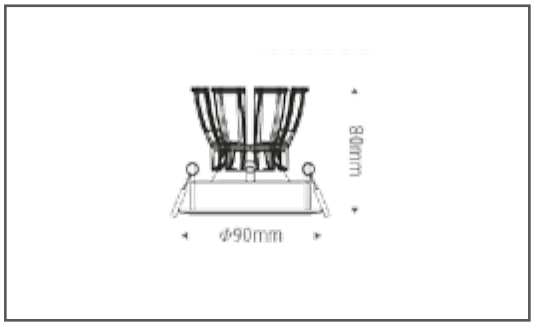

- ϕ80mm (cut out)

LED DOWN LIGHT ROTARY

- Samsung, LG

Applications

- Adjustable Recessed Luminairs LED Downlight
- With three beam angle of high efficiency facets aluminium reflectors
- Clear glass
- Aluminum mounting ring, with system to fix it to the false ceiling using steel springs
- Die-cast heat sink with passive cooling
- Luminaires are equipped with electronic driver or with dimmable electronic driver on reques
- IP40
- white, gray, black

Product Code	HN-FL13R-W30	HN-CR110R-N40	HN-FL13R-C50
Power(W)	15	15	15
Voltage(V)	220-240	220-240	220-240
DC(mA)	350	350	350
CCT(K)	3000	4000	5000
CRI	80	80	80
Beam Angle(°)	40/80	40/80	40/80
Hot Lumen(lm)	900	950	1000
Power Factor	>0.5	>0.5	>0.5
Rated Life(°C)	-30~40	-30~40	-30~40
CTN(PCS)	12	12	12

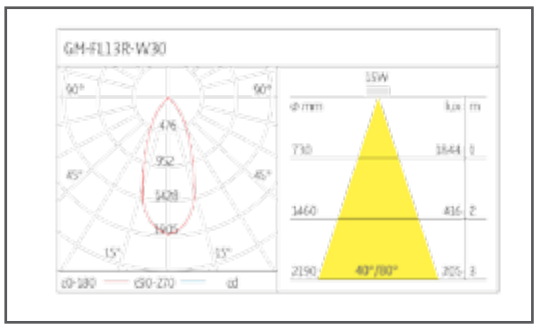

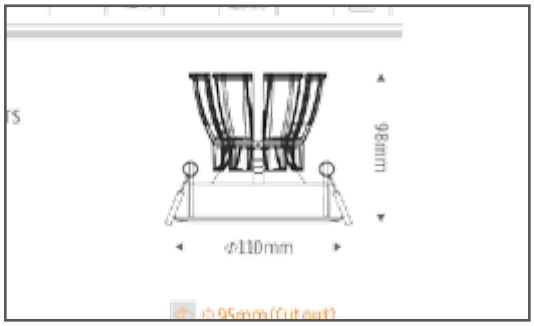

- ϕ95mm (cut out)

LED DOWN LIGHT ROTARY SQ

- Cree Xlamp CXA COB LED

Applications

- ROTARY SQ - Adjustable square ring with round cut off for easy installation. This recessed fixture for high-power LED ARRAY with finned aluminium die cast heat dissipater and spot optic in faceted aluminium. Tempered closing glass which gives the product an IP40 rating. The fixture can be adjustable to an internal tilt35°from the vertical. The fixture can be using different beam angle reflectors for professional designer inquiry.

LED DOWN LIGHT ROTARY SQ

- Cree, Small Reflector Systemx

Applications

- Adjustable Recessed Luminairs LED Downlight
- With three beam angle of high efficiency facets aluminium reflectors
- Clear glass
- Aluminum mounting ring, with system to fix it to the false ceiling using steel springs
- Die-cast heat sink with passive cooling
- Luminaires are equipped with electronic driver or with dimmable electronic driver on request
- IP40
- white, gray, black

Product Code	HN-FL7S-W30	HN-FL7S-N40	HN-FL7S-C50
Power(W)	12	12	12
Voltage(V)	220-240	220-240	220-240
DC(mA)	250	250	250
CCT(K)	3000	4000	5000
CRI	80	80	80
Beam Angle(°)	55/80	55/80	55/80
Hot Lumen(lm)	670	700	750
Power Factor	>0.5	>0.5	>0.5
Rated Life(°C)	-30~40	-30~40	-30~40
CTN(PCS)	12	12	12

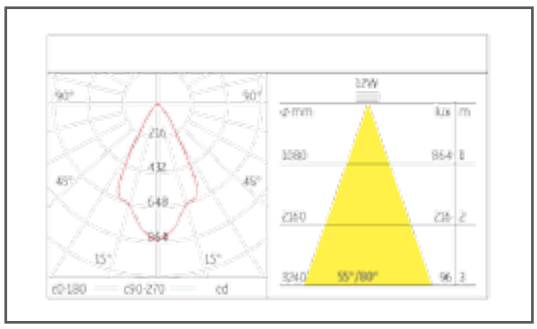

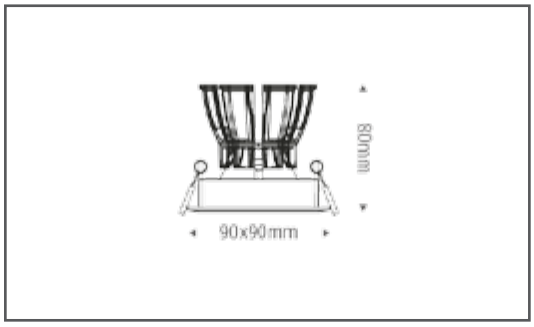

- ϕ80mm (cut out)

LED DOWN LIGHT ROTARY SQ

- Cree

Applications

- Adjustable Recessed Luminairs LED Downlight
- With three beam angle of high efficiency facets aluminium reflectors
- Clear glass
- Aluminum mounting ring, with system to fix it to the false ceiling using steel springs
- Die-cast heat sink with passive cooling
- Luminaires are equipped with electronic driver or with dimmable electronic driver on reques
- IP40
- white, gray, black

Product Code	HN-FL13S-W30	HN-FL13S-N40	HN-FL13S-C50
Power(W)	15	15	15
Voltage(V)	220-240	220-240	220-240
DC(mA)	350	350	350
CCT(K)	3000	4000	5000
CRI	80	80	80
Beam Angle(°)	40/80	40/80	40/80
Hot Lumen(lm)	900	950	1000
Power Factor	>0.5	>0.5	>0.5
Rated Life(°C)	-30~40	-30~40	-30~40
CTN(PCS)	12	12	12

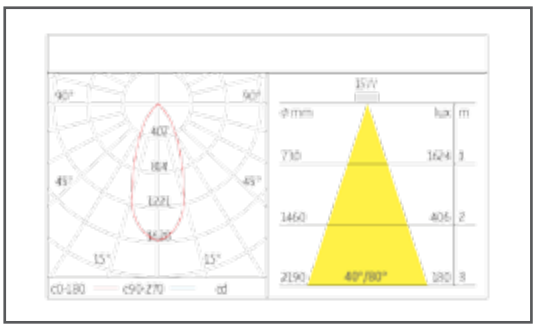

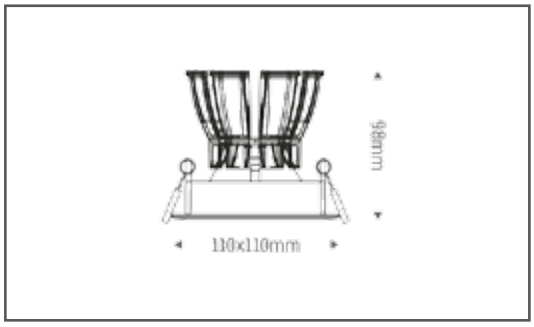

- ϕ95mm (cut out)

LED DOWN LIGHT OSCAR

- Cree Xlamp CXA COB LED

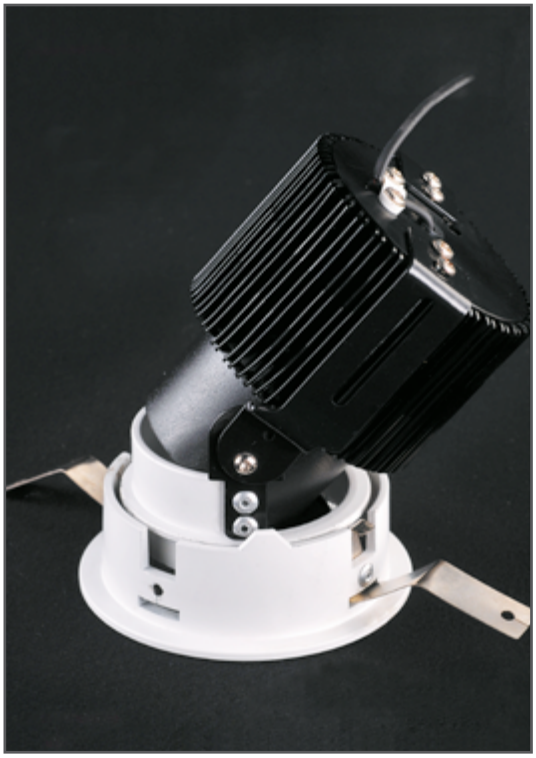

Applications

- OSCAR - Adjustable asymmetric recessed fixture for high-power LED ARRAY with finned aluminium heat dissipater and high efficient spot optic in faceted.With internal tilt of 35° from the vertical.

LED DOWN LIGHT OSCAR

- Cree

Applications

- Adjustable Recessed Luminairs LED Downlight
- High efficiency polycarbonate facet reflector
- Polycarbonate super clear lens
- Aluminum mounting ring, with system to fix it to the false ceiling using steel springs
- Aluminium heat sink with passive cooling
- Luminaires are equipped with electronic driver or with dimmable electronic driver on request
- IP40
- white, gray, black

Product Code	HN-CR85R-W30	HN-CR85R-N40	HN-CR85R-C50
Power(W)	12	12	12
Voltage(V)	100-240	100-240	100-240
DC(mA)	250	250	250
CCT(K)	3000	4000	5000
CRI	80	80	80
Beam Angle(°)	30/50	30/50	30/50
Hot Lumen(lm)	550	570	600
Power Factor	>0.5	>0.5	>0.5
Rated Life(°C)	-30~40	-30~40	-30~40
CTN(PCS)	12	12	12

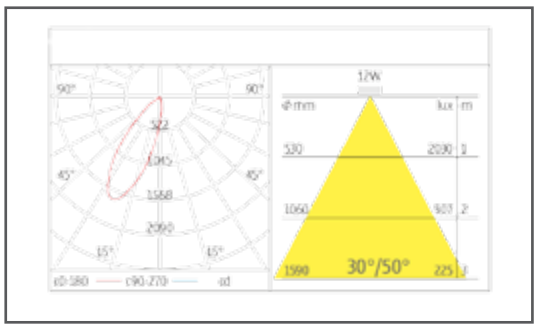

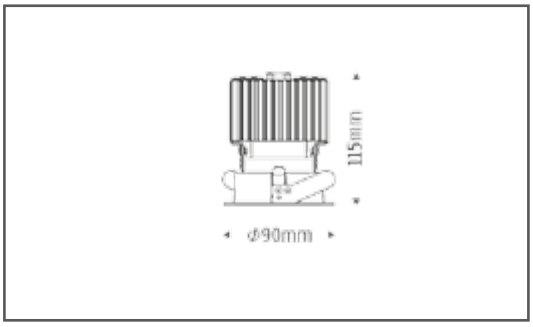

- ϕ80mm (cut out)

LED DOWN LIGHT OSCAR

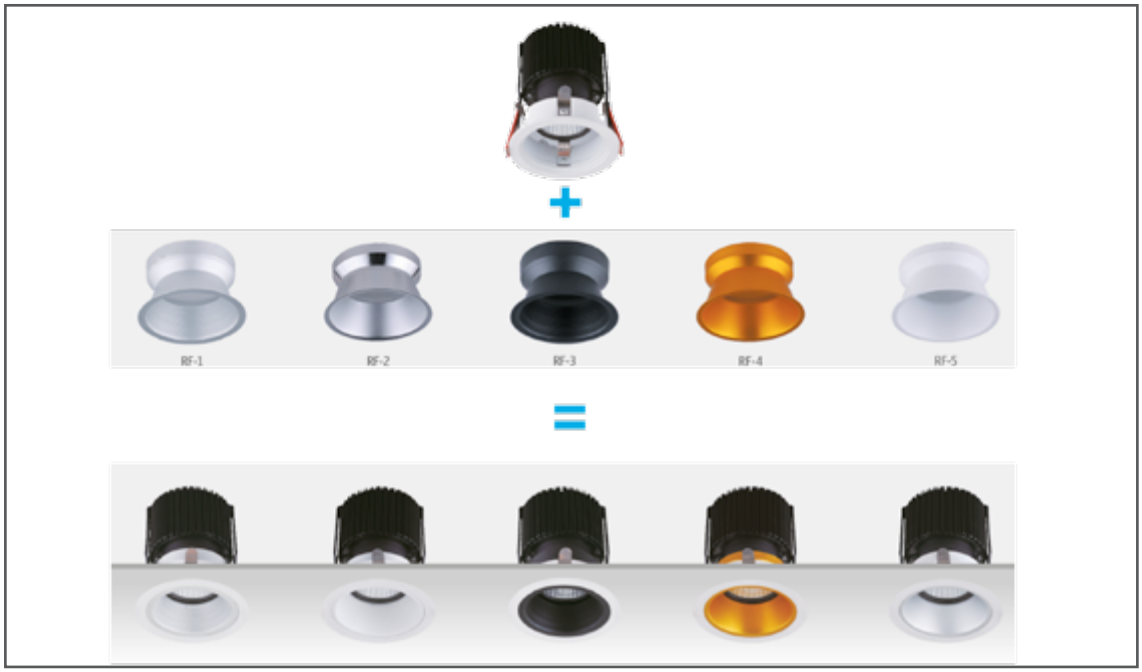

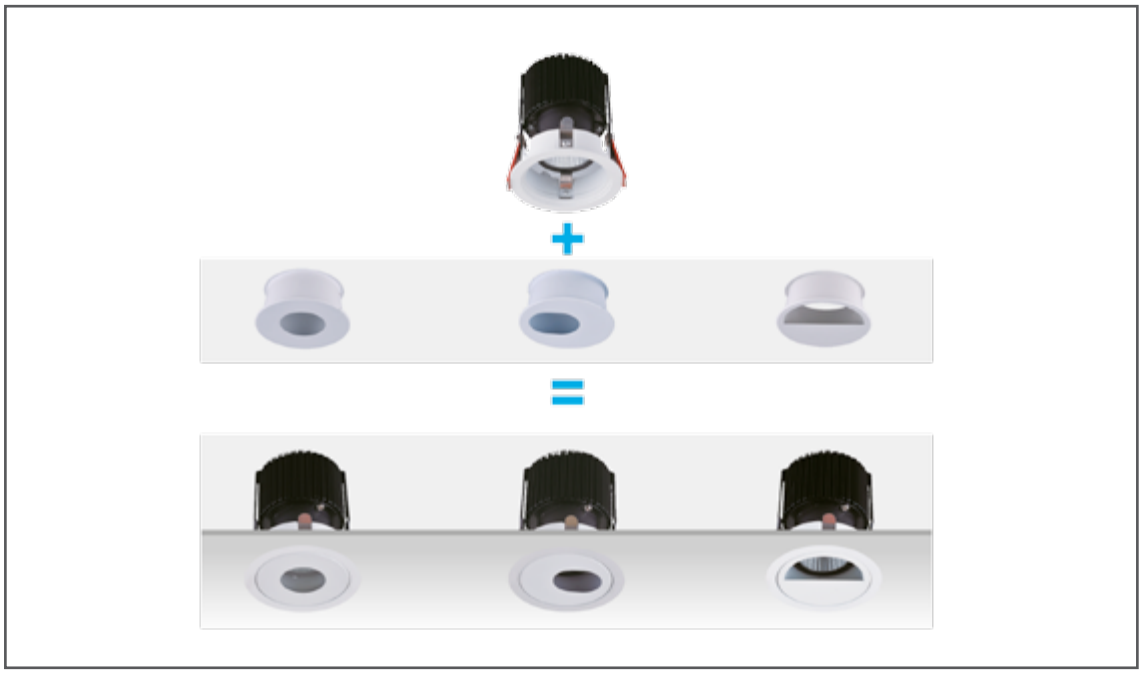

LED DOWN LIGHT OSCAR

- Cree

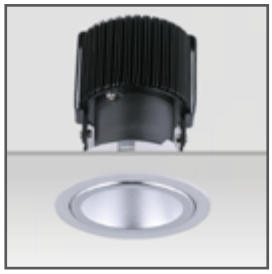

Applications

- Adjustable Recessed Luminairs LED Downlight
- High efficiency polycarbonate facet reflector
- Polycarbonate super clear lens
- Aluminum mounting ring, with system to fix it to the false ceiling using steel springs
- Aluminium heat sink with passive cooling
- Luminaires are equipped with electronic driver or with dimmable electronic driver on request
- IP40
- white, gray, black

Product Code	HN-CR85D-W30	HN-CR85D-N40	HN-CR85D-C50
Power(W)	12	12	12
Voltage(V)	100-240	100-240	100-240
DC(mA)	250	250	250
CCT(K)	3000	4000	5000
CRI	80	80	80
Beam Angle(°)	35/55	35/55	35/55
Hot Lumen(lm)	720	780	810
Power Factor	>0.5	>0.5	>0.5
Rated Life(°C)	-30~40	-30~40	-30~40
CTN(PCS)	12	12	12

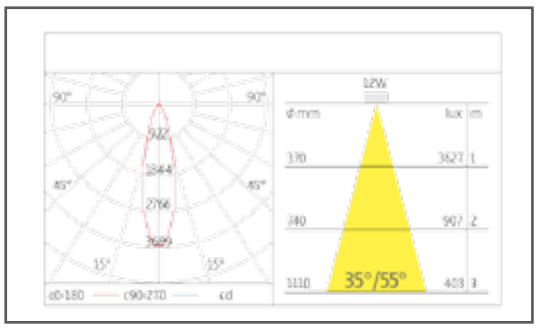

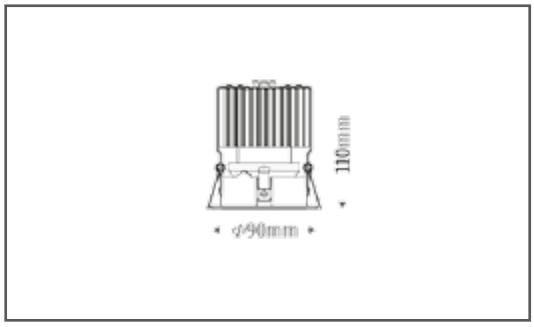

- ϕ80mm (cut out)

LED DOWN LIGHT iLUMA

- CreeXlamp XB-D EasyWhite LEDs

Applications

- Adjustable recessed fixture for high-power LED ARRAY with aluminium die cast heat dissipater and high efficient spot optic in polycarbonate faceted.With internal tilt of 35° from the vertical They are six types of accessaries for professional interial lighting designer‘s application.

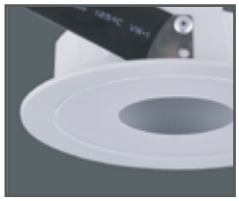

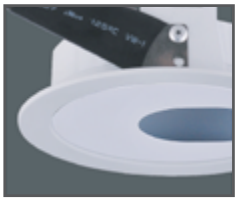

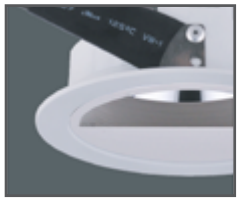

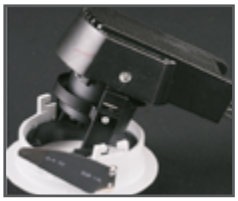

LED DOWN LIGHT iLUMA

- Cree

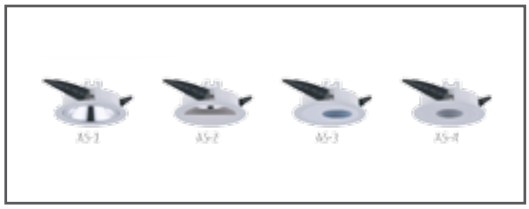

Applications

- Adjustable Recessed Luminairs LED Downlight
- High efficiency polycarbonate facet reflector
- Polycarbonate super clear lens
- Aluminum mounting ring with system to fix it to the false ceiling using steel springs
- Aluminium heat sink with passive cooling
- Luminaires are equipped with electronic driver or with dimmable electronic driver on request
- IP40
- white, gray, black

Product Code	HN-CR85D-W30	HN-CR85D-N40	HN-CR85D-C50
Power(W)	15	15	15
Voltage(V)	100-240	100-240	100-240
DC(mA)	350	350	350
CCT(K)	3000	4000	5000
CRI	80	80	80
Beam Angle(°)	30/50	30/50	30/50
Hot Lumen(lm)	840	950	1080
Power Factor	>0.5	>0.5	>0.5
Rated Life(°C)	-30~40	-30~40	-30~40
CTN(PCS)	12	12	12

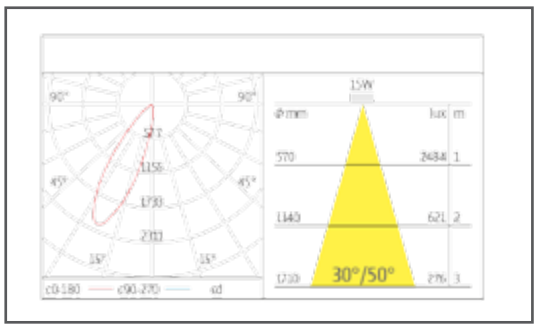

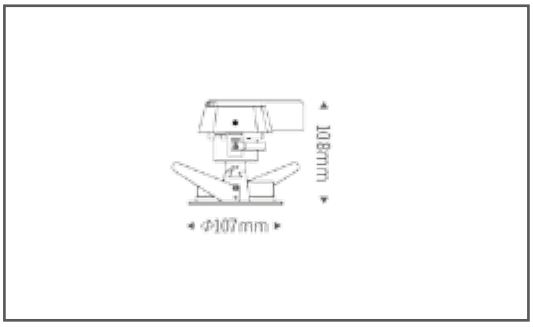

- ϕ98mm (cut out)

LED DOWN LIGHT OSCAR

LED DOWN LIGHT OSCAR

- Cree Xlamp CXA COB LED

Applications

- FOCUS is versatile compact range of downlights featuring shallow installation depths and the lastest generation high performance COB LED chip design. A prismatic faceted alumi nium reflector and an opal diffuser enhance the light source. The result is an excellent luminance level with a soft and uniform dis-tribution. This fixture provides output up to 1050 lm. Arranged singly or in groups, they are a good option for a host of lighting tasks such as hotels, restaurant, bars, cruises, reception halls, and lobbies, retail areas, healthcare facilities and waiting

LED DOWN LIGHT FOCUS

- Samsung, LG

Applications

- Recessed Luminairs LED Downlight
- High efficiency facets aluminium reflectors
- Wide Beam Angle
- Clear glass / frosted glass upon request
- Die-cast aluminum mounting ring, with system to fix it to the false ceiling using steel springs
- Die-cast heat sink with passive cooling
- Luminaires are equipped with electronic driver or with dimmable electronic driver on request
- IP40
- white, gray, black

Product Code	HN-CR100RG-W30	HN-CR100RG-N40	HN-CR100RG-C50
Power(W)	15	15	15
Voltage(V)	100-240	100-240	100-240
DC(mA)	350	350	350
CCT(K)	3000	4000	5000
CRI	80	75	75
Beam Angle(°)	55/95	55/95	55/95
Hot Lumen(lm)	740	760	780
Power Factor	>0.9	>0.9	>0.9
Rated Life(°C)	-30~40	-30~40	-30~40
CTN(PCS)	12	12	12

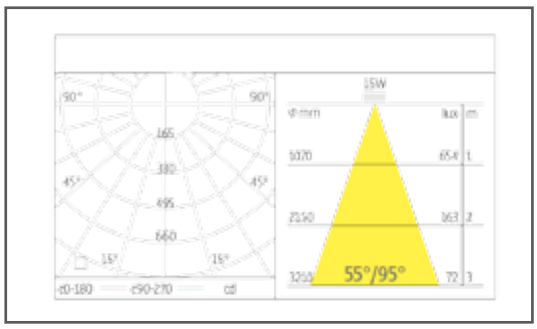

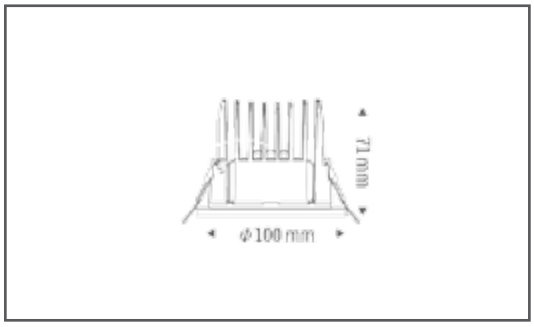

- ϕ85mm (cut out)

LED DOWN LIGHT OSCAR

- Cree Xlamp CXA COB LED

Applications

- FOCUS SQ is versatile compact range of square downlights featuring shallow installation depths and the lastest generation high performance COB LED chip design. A prismatic faceted aluminium reflector and an opal diffuser enhance the light source. The result is an excellent luminance level with a soft and uniform distribution. This fixture provides output up to 980 lm.
- Arranged singly or in groups, they are a good option for a host of lighting tasks such as hotels, restaurant, bars, cruises, reception halls, and lobbies, retail areas, healthcare facilities and waiting rooms.

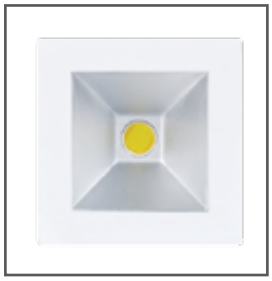

LED DOWN LIGHT FOCUS

- Samsung, LG

Applications

- Recessed Luminairs LED Downlight
- High efficiency facets aluminium reflectors
- Wide Beam Angle
- Clear glass / frosted glass upon request
- Die-cast aluminum mounting ring, with system to fix it to the false ceiling using steel springs
- Die-cast heat sink with passive cooling
- Luminaires are equipped with electronic driver or with dimmable electronic driver on request
- IP40
- white, gray, black

Product Code	HN-CR100SG-W30	HN-CR100SG-N40	HN-CR100SG-C50
Power(W)	15	15	15
Voltage(V)	100-240	100-240	100-240
DC(mA)	350	350	350
CCT(K)	3000	4000	5000
CRI	80	75	75
Beam Angle(°)	80/95	80/95	80/95
Hot Lumen(lm)	720	830	900
Power Factor	>0.5	>0.5	>0.5
Rated Life(°C)	-30~40	-30~40	-30~40
CTN(PCS)	12	12	12

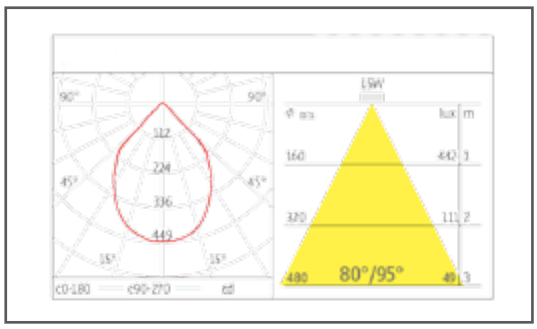

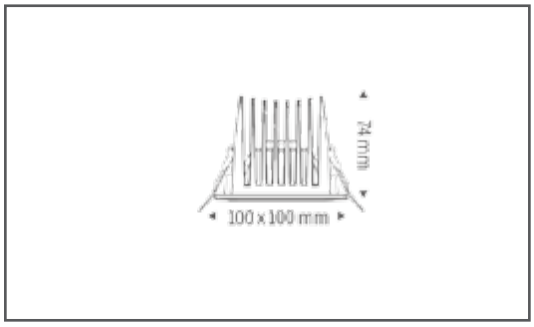

- ϕ85x85mm (cut out)

LED DOWN LIGHT OSCAR

- Cree Xlamp CXA COB LED

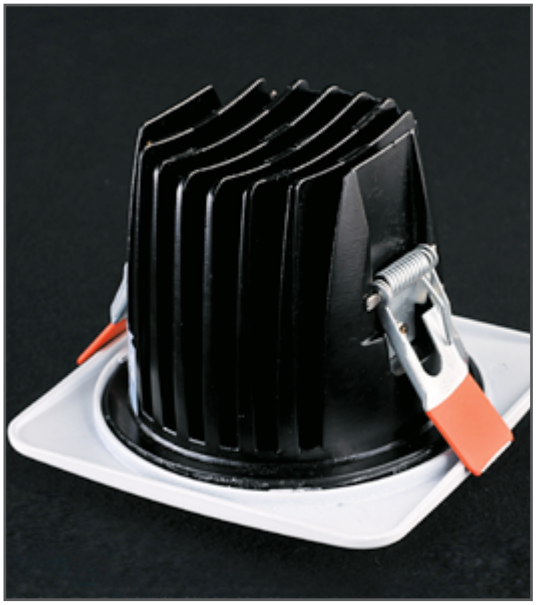

Applications

- FOCUS RSQ is versatile compact range of downlights featuring shallow installation depths and the lastest generation high performance COB LED chip design with square ring and round cut out for easy installation. A prismatic faceted aluminium reflector and an opal diffuser enhance the light the light source. The result is an excellent luminance level with a soft and uniform distribution. This fixture provides output up to 1050 lm.
- Arranged singly or in groups, they are a good option for a host of lighting tasks such as hotels, restaurant, bars, cruises, reception halls, and lobbies, retail areas, healthcare facilities and waiting rooms. They are Class II insulation rating and IP44, and of course come complete with a high quality electrophoretic paint.

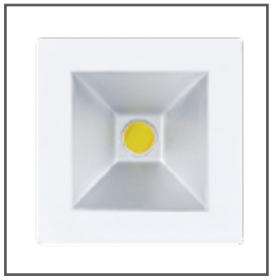

LED DOWN LIGHT FOCUS RSQ

- Samsung, LG

Applications

- Recessed Luminairs LED Downlight
- High efficiency facets aluminium reflectors
- Wide Beam Angle
- Clear glass / frosted glass upon request
- Die-cast aluminum mounting ring, with system to fix it to the false ceiling using steel springs
- Die-cast heat sink with passive cooling
- Luminaires are equipped with electronic driver or with dimmable electronic driver on request
- -With round cut off
- IP40
- white, gray, black

Product Code	HN-CR100RSG-W30	HN-CR100RSG-N40	HN-CR100RSG-C50
Power(W)	15	15	15
Voltage(V)	100-240	100-240	100-240
DC(mA)	350	350	350
CCT(K)	3000	4000	5000
CRI	80	75	75
Beam Angle(°)	55/95	55/95	55/95
Hot Lumen(lm)	850	950	1050
Power Factor	>0.5	>0.5	>0.5
Rated Life(°C)	-30~40	-30~40	-30~40
CTN(PCS)	12	12	12

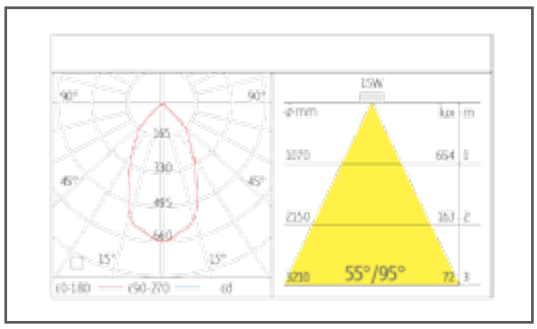

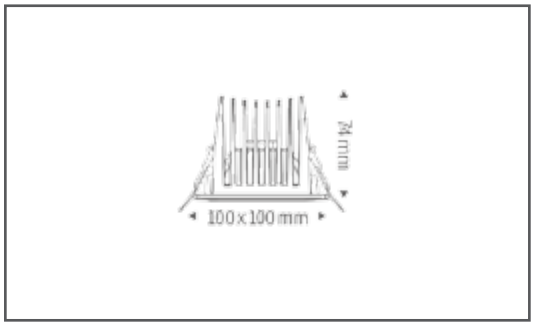

- ϕ85mm (cut out)

LED DOWN LIGHT ACNOVA

- Cree Xlamp CXA COB LED

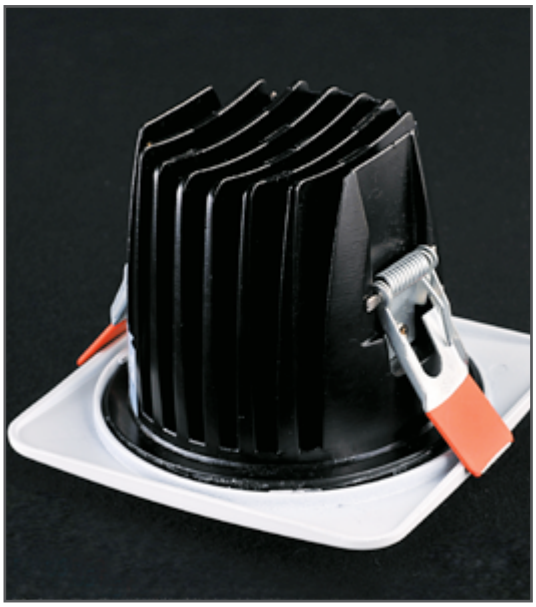

Applications

- Recessed Luminairs AC LED Downlight
- No need external driver or remote driver
- High efficiency facets Aluminium reflector
- Energy saving and Economy
- LED DOWN LIGHT ACNOVA
- Die-cast aluminium mounting ring.with system to fixit to the false ceiling using steel springs.

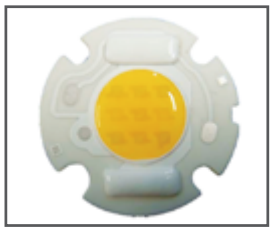

- A metal oxide varistor is often used to protect lighting system from electrical surges and ring-wave Tests(IEEE C.62.41) can be used for these real life threat simulations in the lab, A surge protection circuit consist of to compo-nents (varistor and fuse
- Built-in AC-DC driver: No need external drives. Simply and directly connect to AC power source. High Power efficiency, High power factor HTcc Al203 Ceramic, High thermal conductivity Space saving: Minnimum rate of bodies occupied Color Rendering Index(CRI Ra):
  Ra 80 for warm white(3000K)
  Ra 80 for natural white(4000K)
  Ra 75 for cool white(5000K)
  Input voltage ranges: 220VAC to 240VAC or 100-120VAC, Typical: 230VAC/110VAC

LED DOWN LIGHT AC

- Samsung, LG

Applications

- Recessed Luminairs LED Downlight
- High efficiency facets aluminium reflectors
- wide Beam Angle
- Die-cast aluminum mounting ring,with system to fix itto the false ceiling using steel springs
- Luminaires are equipped with electronic driver or with dimmable electronic driver on request
- IP40
- white, gray, black

Product Code	HN-AC6155-W30	HN-AC6155-N40	HN-AC6155-C50
Power(W)	7	7	7
Voltage(V)	220-240	220-240	220-240
AC(mA)	40	40	40
CCT(K)	3000	4000	5000
CRI	80	80	80
Beam Angle(°)	102/143	102/143	102/143
Hot Lumen(lm)	400	430	460
Power Factor	>0.8	>0.8	>0.8
Rated Life(°C)	-30~40	-30~40	-30~40
CTN(PCS)	12	12	12

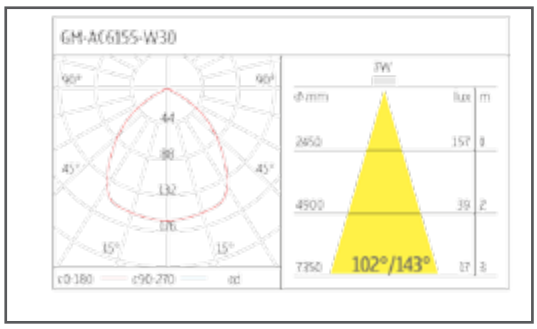

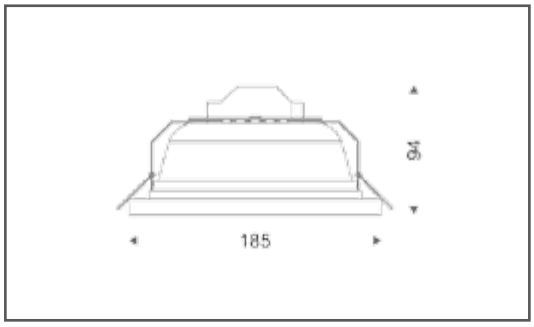

- ϕ168mm (cut out)

LED DOWN LIGHT AC

- Samsung, LG

Applications

- Recessed Luminairs LED Downlight
- High efficiency facets aluminium reflectors
- wide Beam Angle
- Die-cast aluminum mounting ring,with system to fix itto the false ceiling using steel springs
- Luminaires are equipped with electronic driver or with dimmable electronic driver on request
- IP40
- white, gray, black

Product Code	HN-AC6156-W30	HN-AC6156-N40	HN-AC6156-C50
Power(W)	10	10	10
Voltage(V)	220-240	220-240	220-240
DC(mA)	40	40	40
CCT(K)	3000	4000	5000
CRI	80	80	80
Beam Angle(°)	102/143	102/143	102/143
Hot Lumen(lm)	620	630	650
Power Factor	>0.8	>0.8	>0.8
Rated Life(°C)	-30~40	-30~40	-30~40
CTN(PCS)	12	12	12

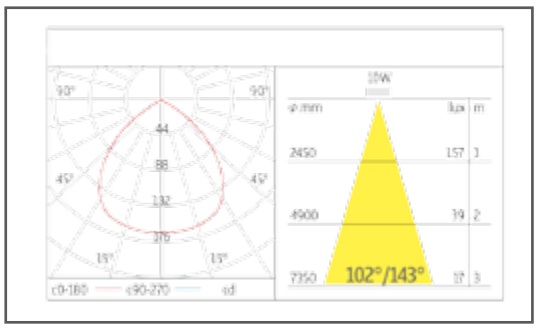

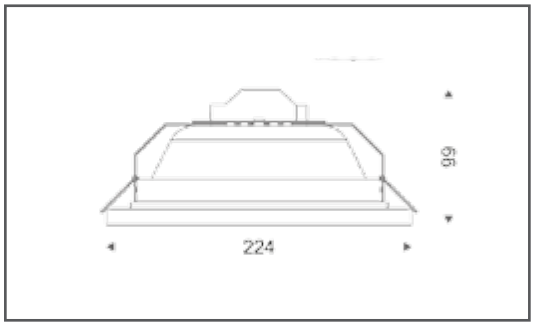

- ϕ195mm (cut out)

LED DOWN LIGHT AC

- Samsung, LG

Applications

- Recessed Luminairs LED Downlight
- High efficiency facets aluminium reflectors
- wide Beam Angle
- Die-cast aluminum mounting ring,with system to fix it to the false ceiling using steel springs
- Luminaires are equipped with electronic driver or with dimmable electronic driver on request
- IP44
- white, gray, black

Product Code	HN-AC8018-W30	HN-AC8018-N40	HN-AC8018-C50
Power(W)	13	13	13
Voltage(V)	220-240	220-240	220-240
AC(mA)	65	65	65
CCT(K)	3000	4000	5000
CRI	80	80	80
Beam Angle(°)	66/132	66/132	66/132
Hot Lumen(lm)	840	930	1000
Power Factor	>0.9	>0.9	>0.9
Rated Life(°C)	-30~40	-30~40	-30~40
CTN(PCS)	12	12	12

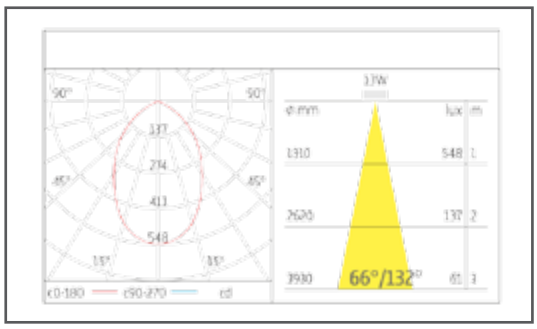

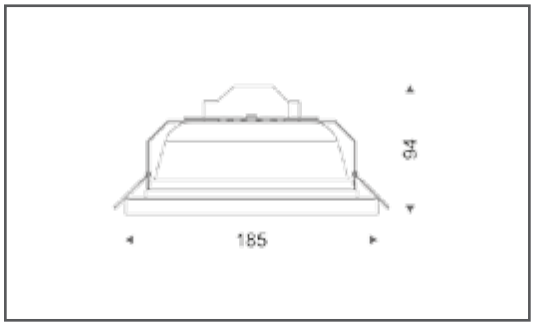

- ϕ168mm (cut out)

LED DOWN LIGHT AC

- Samsung, LG

Applications

- Recessed Luminairs LED Downlight
- High efficiency facets aluminium reflectors
- wide Beam Angle
- Die-cast aluminum mounting ring,with system to fix itto the false ceiling using steel springs
- Luminaires are equipped with electronic driver or with dimmable electronic driver on request
- IP40
- white, gray, black

Product Code	HN-AC8019-W30	HN-AC8019-N40	HN-AC8019-C50
Power(W)	18	18	18
Voltage(V)	220-240	220-240	220-240
AC(mA)	65	65	65
CCT(K)	3000	4000	5000
CRI	80	80	80
Beam Angle(°)	66/132	66/132	66/132
Hot Lumen(lm)	1150	1250	1400
Power Factor	>0.9	>0.9	>0.9
Rated Life(°C)	-30~40	-30~40	-30~40
CTN(PCS)	12	12	12

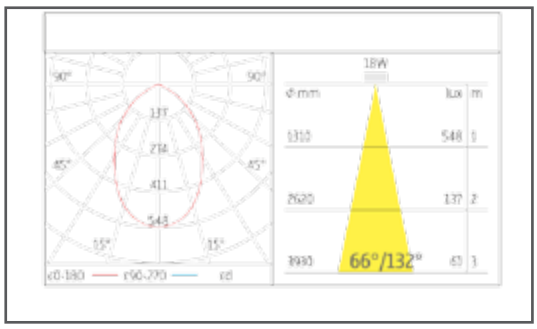

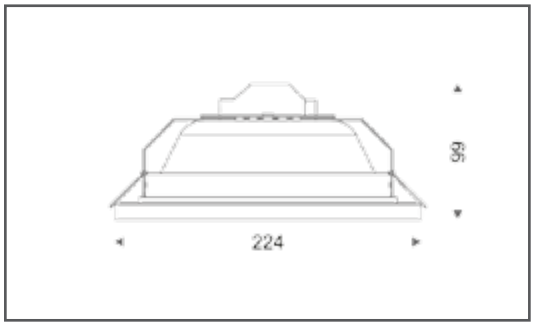

- ϕ195mm (cut out)

LED DOWN LIGHT ACNOVA R

- Cree Xlamp CXA COB LED

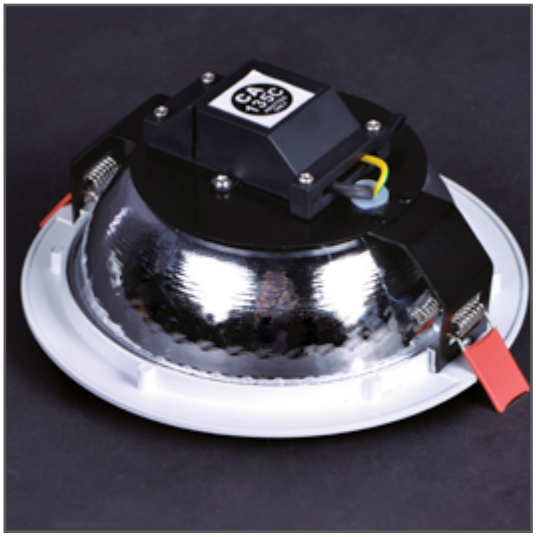

Applications

- ACNOVA R - Recessed Luminairs AC LED Down-light

No need external driiver or remote driver

High efficiency facets Aluminium reflector

The opal freshnel diffuser provides transmission, uniformity and glare control for visual comfort

Energy saving and Economy

LED DOWN LIGHT AC R

- Samsung, LG

Applications

- Recessed Luminairs LED Downlight
- High efficiency facets aluminium reflectors
- wide Beam Angle
- Die-cast aluminum mounting ring,with system to fix itto the false ceiling using steel springs
- Luminaires are equipped with electronic driver or with dimmable electronic driver on request
- IP40
- white, gray, black

Product Code	HN- AC4251-W30	HN-AC4251-N40	HN- AC4251-C50
Power(W)	7	7	7
Voltage(V)	220-240	220-240	220-240
AC(mA)	40	40	40
CCT(K)	3000	4000	5000
CRI	80	80	80
Beam Angle(°)	85/132	85/132	85/132
Hot Lumen(lm)	400	440	470
Power Factor	>0.8	>0.8	>0.8
Rated Life(°C)	-30~40	-30~40	-30~40
CTN(PCS)	12	12	12

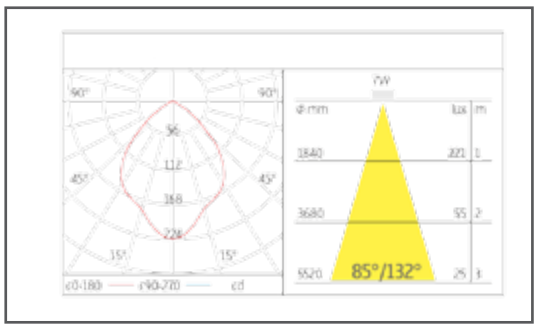

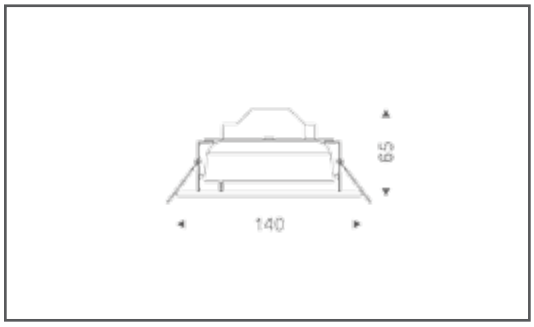

- ϕ132mm (cut out)

LED DOWN LIGHT AC R 2

- Samsung, LG

Applications

- Recessed Luminairs LED Downlight
- High efficiency facets aluminium reflectors
- wide Beam Angle
- Die-cast aluminum mounting ring,with system to fix itto the false ceiling using steel springs
- Luminaires are equipped with electronic driver or with dimmable electronic driver on request
- IP40
- white, gray, black

Product Code	HN- -AC5251-W30	HN-AC5251-N40	HN- -AC5251-C50
Power(W)	10	10	10
Voltage(V)	220-240	220-240	220-240
AC(mA)	40	40	40
CCT(K)	3000	4000	5000
CRI	80	80	80
Beam Angle(°)	75/140	75/140	75/140
Hot Lumen(lm)	640	650	680
Power Factor	>0.8	>0.8	>0.8
Rated Life(°C)	-30~40	-30~40	-30~40
CTN(PCS)	12	12	12

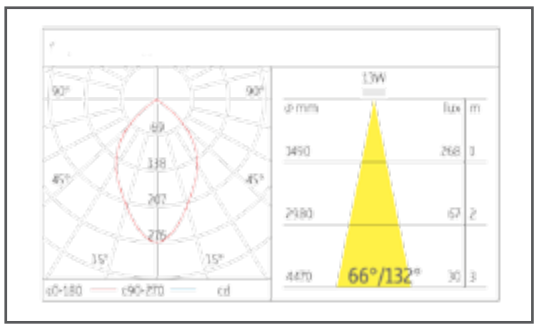

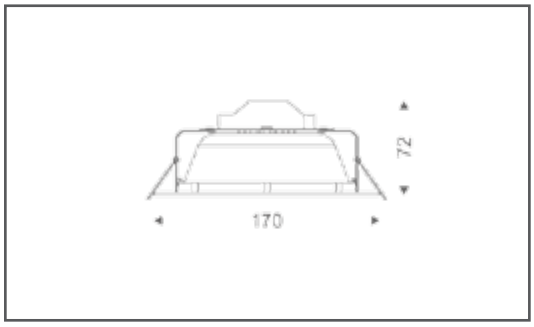

- ϕ160mm (cut out)

LED DOWN LIGHT AC R 3

- Samsung, LG

Applications

- Recessed Luminairs LED Downlight
- High efficiency facets aluminium reflectors
- wide Beam Angle
- Die-cast aluminum mounting ring,with system to fix itto the false ceiling using steel springs
- Luminaires are equipped with electronic driver or with dimmable electronic driver on request
- IP40
- white, gray, black

Product Code	HN- AC6251-W30	HN-AC6251-N40	HN-AC6251-C50
Power(W)	13	13	13
Voltage(V)	220-240	220-240	220-240
AC(mA)	65	65	65
CCT(K)	3000	4000	5000
CRI	80	80	80
Beam Angle(°)	91/141	91/141	91/141
Hot Lumen(lm)	880	940	1060
Power Factor	>0.9	>0.9	>0.9
Rated Life(°C)	-30~40	-30~40	-30~40
CTN(PCS)	12	12	12

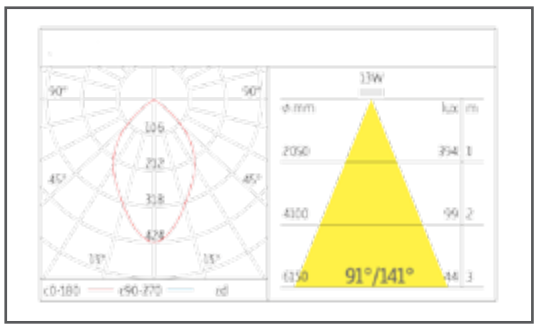

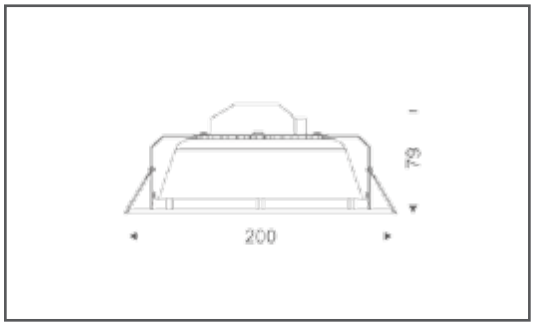

- ϕ180mm (cut out)

LED DOWN LIGHT ACNOVA SQ

- Cree Xlamp CXA COB LED

Applications

- ACNOVA SQ - Recessed Luminairs AC LED

Downlight

Ultra-thin Luminairs Body

No need external driver or remote driver

High efficiency facets Aluminium reflector

It is using a new freshnel lens with a district opal design technology that more efficiency reproduces the lighting properties of SMD

Energy saving and Economy

LED DOWN LIGHT ACNOVA SQ

- Samsung, LG

Applications

- Recessed Luminairs LED Downlight
- High efficiency facets aluminium reflectors
- wide Beam Angle
- Die-cast aluminum mounting ring,with system to fix itto the false ceiling using steel springs
- Luminaires are equipped with electronic driver or with dimmable electronic driver on request
- IP44
- white, gray, black

Product Code	HN- AC6251-W30	HN-AC6251-N40	HN-AC6251-C50
Power(W)	7	7	7
Voltage(V)	220-240	220-240	220-240
AC(mA)	40	40	40
CCT(K)	3000	4000	5000
CRI	80	80	80
Beam Angle(°)	80/139	80/139	80/139
Hot Lumen(lm)	440	450	470
Power Factor	>0.8	>0.8	>0.8
Rated Life(°C)	-30~40	-30~40	-30~40
CTN(PCS)	12	12	12

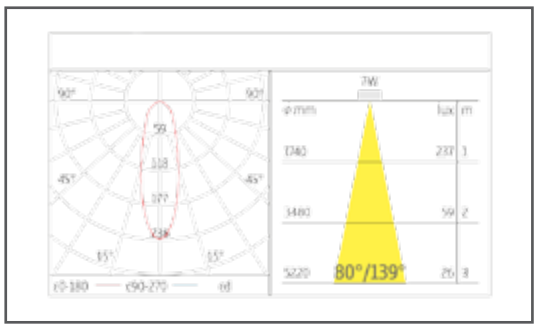

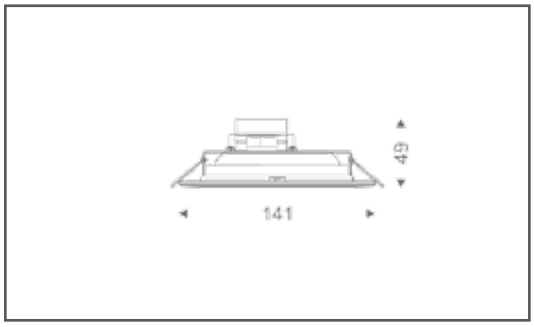

- ϕ128mm (cut out)

LED DOWN LIGHT ACNOVA SQ

- Samsung, LG

Applications

- Recessed Luminairs LED Downlight
- High efficiency facets aluminium reflectors
- wide Beam Angle
- Die-cast aluminum mounting ring,with system to fix itto the false ceiling using steel springs
- Luminaires are equipped with electronic driver or with dimmable electronic driver on request
- IP44
- white, gray, black

Product Code	HN- AC6251-W30	HN-AC6251-N40	HN-AC6251-C50
Power(W)	10	10	10
Voltage(V)	220-240	220-240	220-240
AC(mA)	40	40	40
CCT(K)	3000	4000	5000
CRI	80	80	80
Beam Angle(°)	75/140	75/140	75/140
Hot Lumen(lm)	640	650	680
Power Factor	>0.8	>0.8	>0.8
Rated Life(°C)	-30~40	-30~40	-30~40
CTN(PCS)	12	12	12

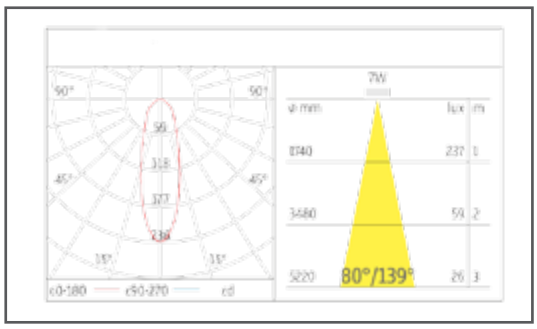

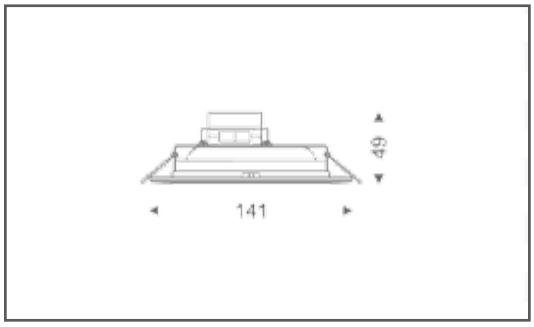

- ϕ128mm (cut out)

LED DOWN LIGHT ACNOVA SQ

- Samsung, LG

Applications

- Recessed Luminairs LED Downlight
- High efficiency facets aluminium reflectors
- wide Beam Angle
- Die-cast aluminum mounting ring,with system to fix itto the false ceiling using steel springs
- Luminaires are equipped with electronic driver or with dimmable electronic driver on request
- IP44
- white, gray, black

Product Code	HN- -AC8457-W30	HN--AC8457-N40	HN-AC8457-C50
Power(W)	13	13	13
Voltage(V)	220-240	220-240	220-240
AC(mA)	65	65	65
CCT(K)	3000	4000	5000
CRI	80	80	80
Beam Angle(°)	91/141	91/141	91/141
Hot Lumen(lm)	880	940	1060
Power Factor	>0.9	>0.9	>0.9
Rated Life(°C)	-30~40	-30~40	-30~40
CTN(PCS)	12	12	12

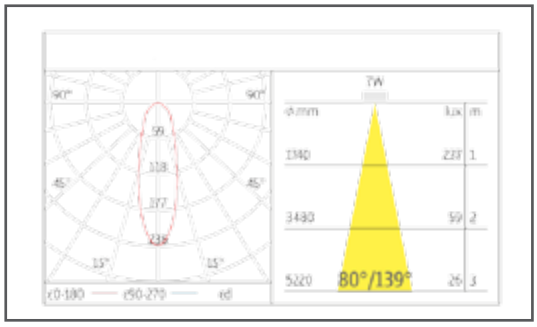

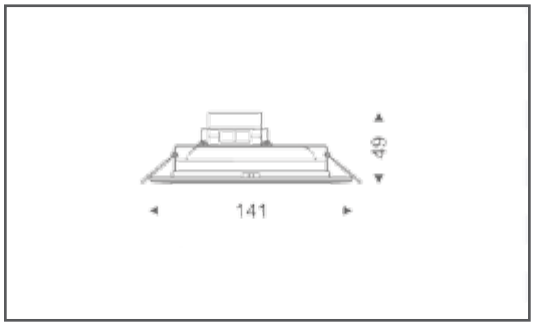

- ϕ128mm (cut out)

LED DOWN LIGHT ACNOVA DRS

- Cree Xlamp CXA COB LED

Applications

- ACNOVA DRS - It is designed for economic purpose by using low power AC LED with pure aluminium reflectors as a heatsink to dissipate the heat

No need external driver or remote driver

High efficiency facets Aluminium reflector

It is using a new freshnel lens with a district opal design technology that more efficiency reproduces the lighting properties of SMD

Energy saving and Economy

LED DOWN LIGHT ACNOVA DRS - 1

- Samsung, LG

Applications

- Recessed Luminairs LED Downlight
- High efficiency facets aluminium reflectors
- wide Beam Angle
- Die-cast aluminum mounting ring,with system to fix itto the false ceiling using steel springs
- Luminaires are equipped with electronic driver or with dimmable electronic driver on request
- IP44
- white, gray, black

Product Code	HN- -AC8457-W30	HN--AC8457-N40	HN-AC8457-C50
Power(W)	7	7	7
Voltage(V)	220-240	220-240	220-240
AC(mA)	40	40	40
CCT(K)	3000	4000	5000
CRI	80	80	80
Beam Angle(°)	72/106	72/106	72/106
Hot Lumen(lm)	410	440	490
Power Factor	>0.8	>0.8	>0.8
Rated Life(°C)	-30~40	-30~40	-30~40
CTN(PCS)	12	12	12

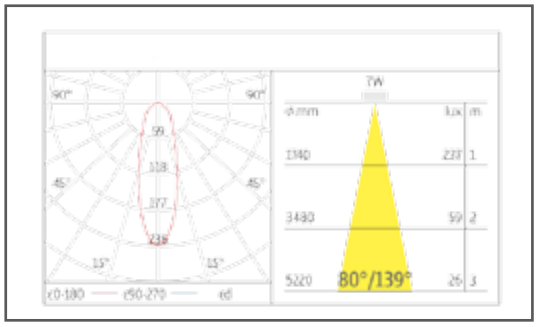

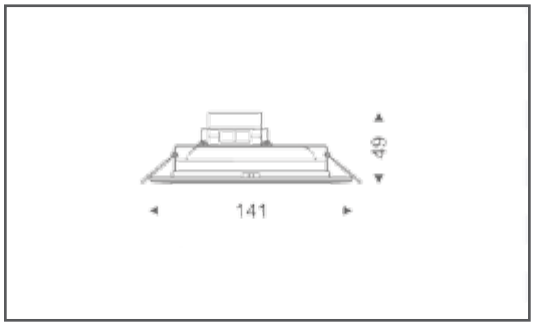

- ϕ128mm (cut out)

LED DOWN LIGHT ACNOVA DRS - 2

- Samsung, LG

Applications

- Recessed Luminairs LED Downlight
- High efficiency facets aluminium reflectors
- wide Beam Angle
- Die-cast aluminum mounting ring,with system to fix itto the false ceiling using steel springs
- Luminaires are equipped with electronic driver or with dimmable electronic driver on request
- IP44
- white, gray, black

Product Code	HN-AC8357DR-W30	HN-AC8357DR-N40	HN-AC8357DR-C50
Power(W)	10	10	10
Voltage(V)	220-240	220-240	220-240
AC(mA)	40	40	40
CCT(K)	3000	4000	5000
CRI	80	80	80
Beam Angle(°)	75/140	75/140	75/140
Hot Lumen(lm)	640	650	680
Power Factor	>0.8	>0.8	>0.8
Rated Life(°C)	-30~40	-30~40	-30~40
CTN(PCS)	12	12	12

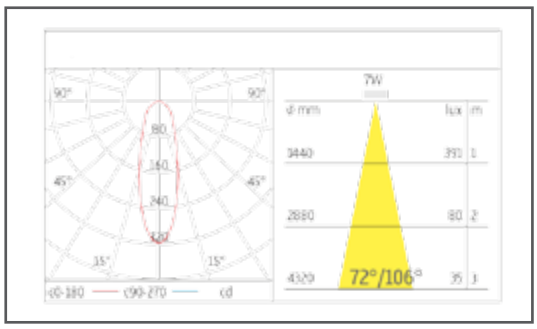

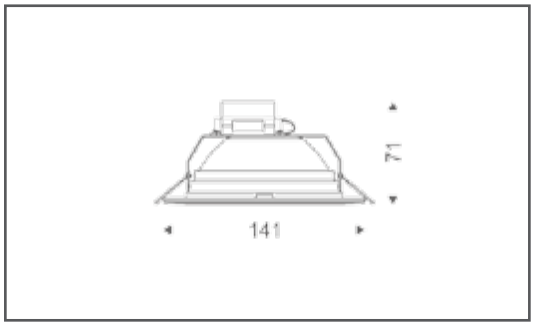

- ϕ128mm (cut out)

LED DOWN LIGHT ACNOVA DRS - 3

- Samsung, LG

Applications

- Recessed Luminairs LED Downlight
- High efficiency facets aluminium reflectors
- wide Beam Angle
- Die-cast aluminum mounting ring,with system to fix itto the false ceiling using steel springs
- Luminaires are equipped with electronic driver or with dimmable electronic driver on request
- IP44
- white, gray, black

Product Code	HN- AC8357DR-W30	HN-AC8357DR-N40	HN-AC8357DR-C50
Power(W)	13	13	13
Voltage(V)	220-240	220-240	220-240
AC(mA)	65	65	65
CCT(K)	3000	4000	5000
CRI	80	80	80
Beam Angle(°)	91/141	91/141	91/141
Hot Lumen(lm)	880	940	1060
Power Factor	>0.9	>0.9	>0.9
Rated Life(°C)	-30~40	-30~40	-30~40
CTN(PCS)	12	12	12

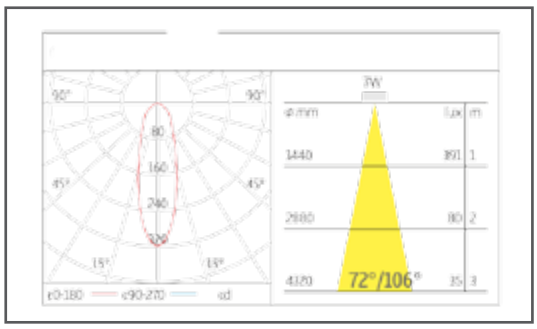

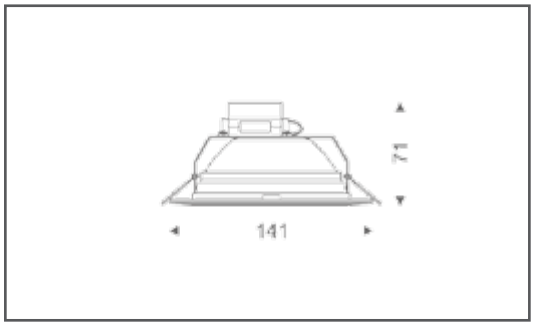

- ϕ128mm (cut out)

LED DOWN LIGHT ACNOVA RR

- Cree Xlamp CXA COB LED

Applications

- ACNOVA DRS - Recessed Square Luminairs AC LED Downlight

Ultra-thin Luminairs Body

No need external driver or remote driver

High efficiency facets Aluminium reflector

It is using a new freshnel lens with a district opal design technology that more efficiency reproduces the lighting properties of SMD

Energy saving and Economy

LED DOWN LIGHT ACNOVA RR - 1

- Samsung, LG

Applications

- Recessed Luminairs LED Downlight
- High efficiency facets aluminium reflectors
- wide Beam Angle
- Die-cast aluminum mounting ring,with system to fix itto the false ceiling using steel springs
- Luminaires are equipped with electronic driver or with dimmable electronic driver on request
- IP44
- white, gray, black

Product Code	HN- AC8755-W30	HN -AC8755-N40	HN-AC8357DR-C50
Power(W)	7	7	7
Voltage(V)	220-240	220-240	220-240
AC(mA)	40	40	40
CCT(K)	3000	4000	5000
CRI	80	80	80
Beam Angle(°)	90/140	90/140	90/140
Hot Lumen(lm)	460	480	490
Power Factor	>0.8	>0.8	>0.8
Rated Life(°C)	-30~40	-30~40	-30~40
CTN(PCS)	12	12	12

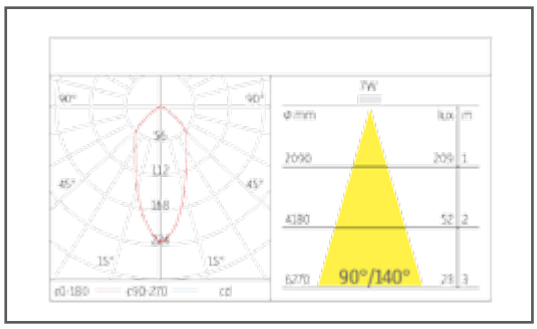

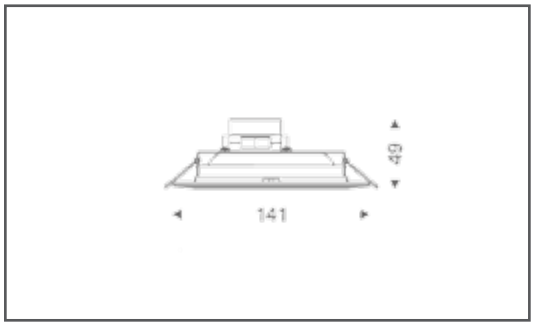

- ϕ128mm (cut out)

LED DOWN LIGHT ACNOVA RR - 2

- Samsung, LG

Applications

- Recessed Luminairs LED Downlight
- High efficiency facets aluminium reflectors
- wide Beam Angle
- Die-cast aluminum mounting ring,with system to fix itto the false ceiling using steel springs
- Luminaires are equipped with electronic driver or with dimmable electronic driver on request
- IP44
- white, gray, black

Product Code	HN- AC8766-W30	HN -AC8766-N40	HN-AC8766-C50
Power(W)	10	10	10
Voltage(V)	220-240	220-240	220-240
AC(mA)	40	40	40
CCT(K)	3000	4000	5000
CRI	80	80	80
Beam Angle(°)	80/139	80/139	80/139
Hot Lumen(lm)	650	690	7000
Power Factor	>0.8	>0.8	>0.8
Rated Life(°C)	-30~40	-30~40	-30~40
CTN(PCS)	12	12	12

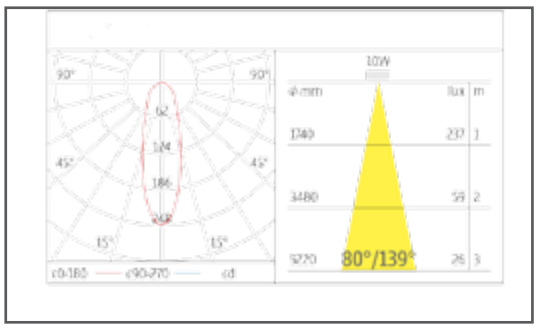

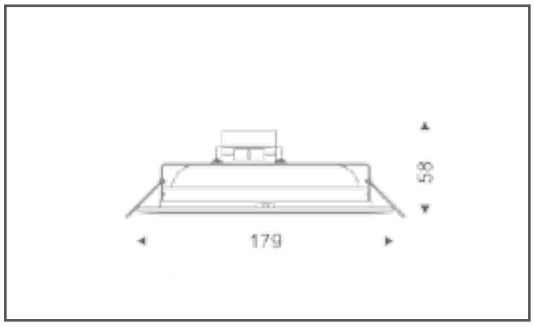

- ϕ175mm (cut out)

LED DOWN LIGHT ACNOVA RR - 3

- Samsung, LG

Applications

- Recessed Luminairs LED Downlight
- High efficiency facets aluminium reflectors
- wide Beam Angle
- Die-cast aluminum mounting ring,with system to fix itto the false ceiling using steel springs
- Luminaires are equipped with electronic driver or with dimmable electronic driver on request
- IP44
- white, gray, black

Product Code	HN- AC8777-W30	HN -AC8777-N40	HN-AC8777DR-C50
Power(W)	13	13	13
Voltage(V)	220-240	220-240	220-240
AC(mA)	65	65	65
CCT(K)	3000	4000	5000
CRI	80	80	80
Beam Angle(°)	88/140	88/140	88/140
Hot Lumen(lm)	960	970	990
Power Factor	>0.9	>0.9	>0.9
Rated Life(°C)	-30~40	-30~40	-30~40
CTN(PCS)	12	12	12

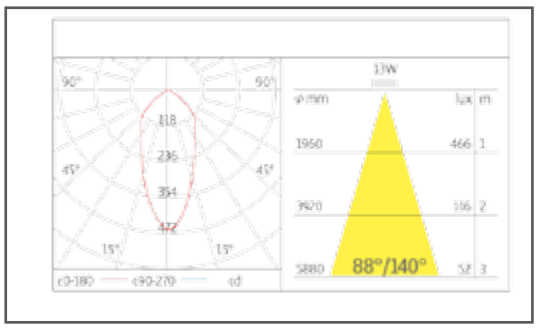

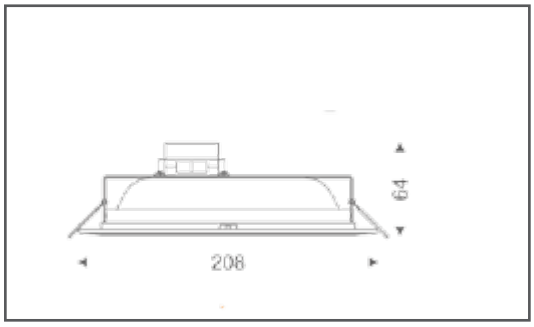

- ϕ195mm (cut out)

LED DOWN LIGHT ACNOVA DR

- Cree Xlamp CXA COB LED

Applications

- ACNOVA DR - It is designed for economic purpose by using low power AC LED with pure aluminium reflectors as a heatsink to dissipate the heatNo need external driver or remote driver
High efficiency facets Aluminium reflector
It is using a new freshnel lens with a district opal design technology that more efficiency reproduces the lighting properties of SMD
Energy saving and Economy

LED DOWN LIGHT ACNOVA DR - 1

- Samsung, LG

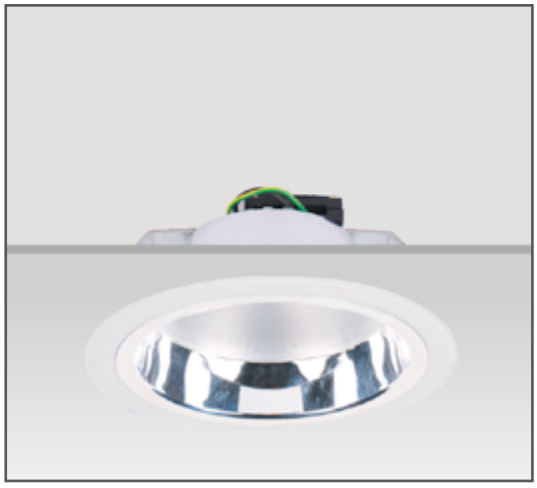

Applications

- Recessed Luminairs LED Downlight
- High efficiency facets aluminium reflectors
- wide Beam Angle
- Die-cast aluminum mounting ring,with system to fix itto the false ceiling using steel springs
- Luminaires are equipped with electronic driver or with dimmable electronic driver on request
- IP44
- white, gray, black

Product Code	HN- AC8855DR-W30	HN -AC8855DR-N40	HN-AC8855DR-C50
Power(W)	7	7	7
Voltage(V)	220-240	220-240	220-240
AC(mA)	40	40	40
CCT(K)	3000	4000	5000
CRI	80	80	80
Beam Angle(°)	52/110	52/110	52/110
Hot Lumen(lm)	410	450	40
Power Factor	>0.8	>0.8	>0.8
Rated Life(°C)	-30~40	-30~40	-30~40
CTN(PCS)	12	12	12

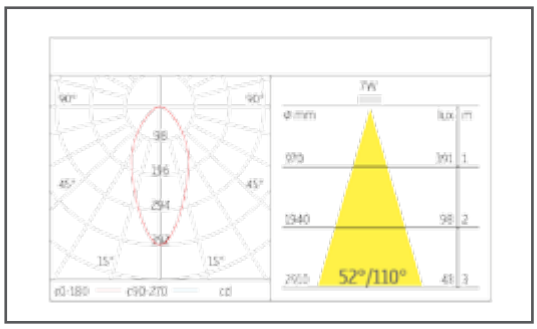

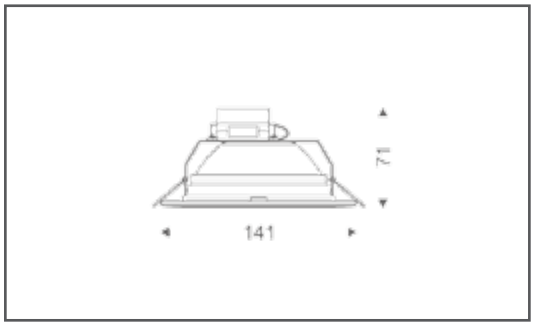

- ϕ128mm (cut out)

LED DOWN LIGHT ACNOVA DR - 2

- Samsung, LG

Applications

- Recessed Luminairs LED Downlight
- High efficiency facets aluminium reflectors
- wide Beam Angle
- Die-cast aluminum mounting ring,with system to fix itto the false ceiling using steel springs
- Luminaires are equipped with electronic driver or with dimmable electronic driver on request
- IP44
- white, gray, black

Product Code	HN- AC8866DR-W30	HN -AC8866DR-N40	HN-AC8866DR-C50
Power(W)	10	10	10
Voltage(V)	220-240	220-240	220-240
AC(mA)	40	40	40
CCT(K)	3000	4000	5000
CRI	80	80	80
Beam Angle(°)	70/110	70/110	70/110
Hot Lumen(lm)	630	660	680
Power Factor	>0.9	>0.9	>0.9
Rated Life(°C)	-30~40	-30~40	-30~40
CTN(PCS)	12	12	12

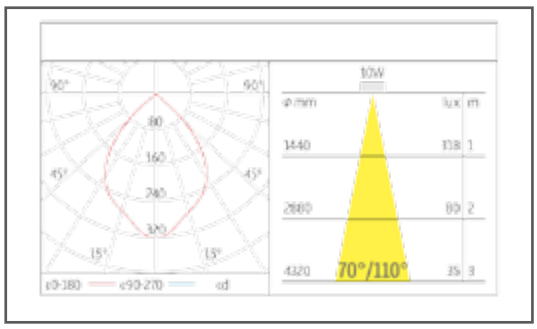

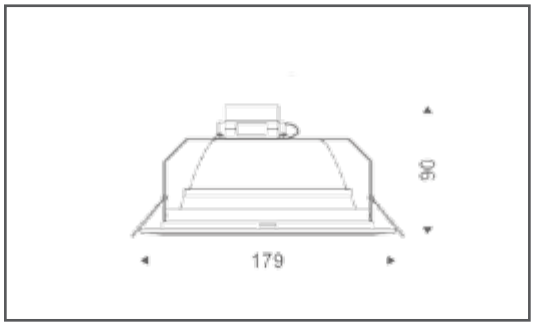

- ϕ170mm (cut out)

LED DOWN LIGHT ACNOVA DR - 3

- Samsung, LG

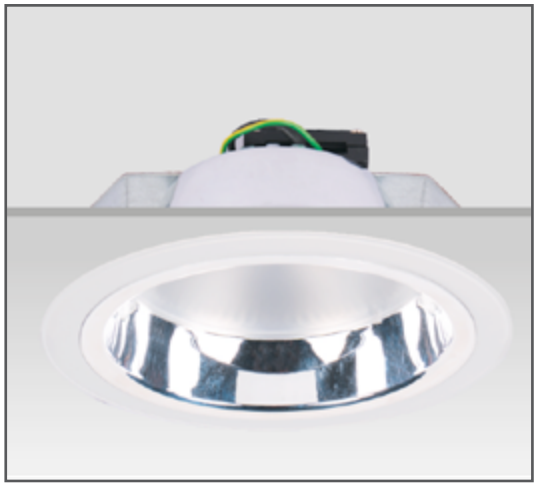

Applications

- Recessed Luminairs LED Downlight
- High efficiency facets aluminium reflectors
- wide Beam Angle
- Die-cast aluminum mounting ring,with system to fix itto the false ceiling using steel springs
- Luminaires are equipped with electronic driver or with dimmable electronic driver on request
- IP44
- white, gray, black

Product Code	HN- AC8777-W30	HN -AC8777-N40	HN-AC8777DR-C50
Power(W)	13	13	13
Voltage(V)	220-240	220-240	220-240
AC(mA)	65	65	65
CCT(K)	3000	4000	5000
CRI	80	80	80
Beam Angle(°)	64/110	64/110	64/110
Hot Lumen(lm)	960	1030	1080
Power Factor	>0.9	>0.9	>0.9-
Rated Life(°C)	-30~40	-30~40	-30~40
CTN(PCS)	12	12	12

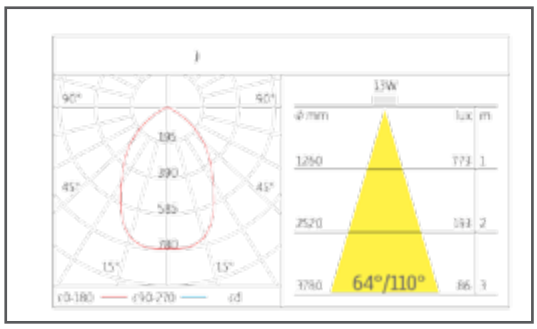

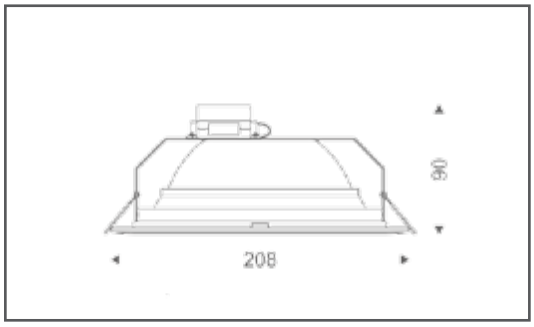

- ϕ195mm (cut out)

LED DOWN LIGHT iDUVA

- Cree Xlamp CXA COB LED

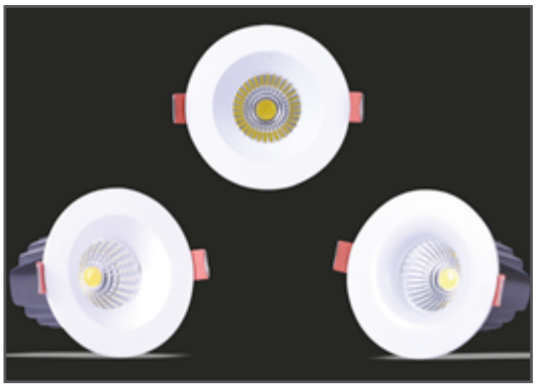

Applications

- High efficiency facets plastic reflectors
- Narrow wide beam angle
- Energy saving and Economy
- Die-cast aluminium mounting ring.with system to fixit to the false ceiling using steel springs.

- A metal oxide varistor is often used to protect lighting system from electrical surges and ring-wave and help manufacturers meet safety and performance standarts. The varistor pre-vents short-duration voltage impulse. Lighting tests (IES61000) and ring-wave Tests (IEEEC.62.41) can be used for these real life threat simulations in the lab. A surge protection circuit consist of to components (varistor and fuse

LED DOWN LIGHT iDUVA - 1

- Cree

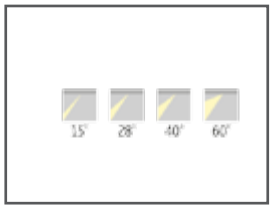

Applications

- Recessed Luminairs LED Downlight
- High efficiency facets aluminium reflectors
- Narrow I wide Beam Angle
- Die-cast aluminum mounting ring,with system to fix it to the false ceiling using steel springs
- Die-cast heat sinkwith passive cooling
- Luminaires are equipped with electronic driver or with dimmable electronic driver on request
- IP44
- white, gray, black

Product Code	HN-LB3065R-W30	HN-LB3065R-N40	HN-LB3065R-C50
Power(W)	10	10	10
Voltage(V)	220-240	220-240	220-240
DC(mA)	50	50	50
CCT(K)	3000	4000	5000
CRI	80	80	80
Beam Angle(°)	45/90	45/90	45/90
Hot Lumen(lm)	660	670	690
Power Factor	>0.9	>0.9	>0.9
Rated Life(°C)	-30~40	-30~40	-30~40
CTN(PCS)	12	12	12

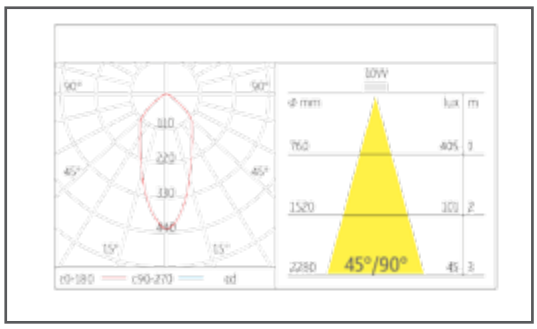

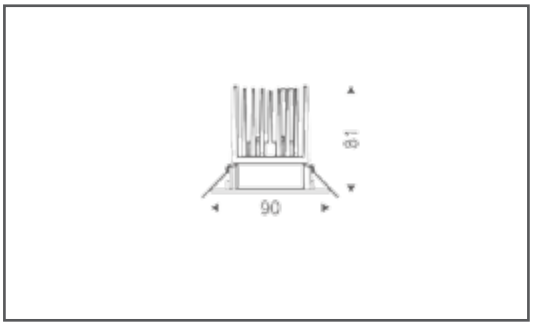

- ϕ70m (cut out)

LED DOWN LIGHT iDUVA - 2

- Cree

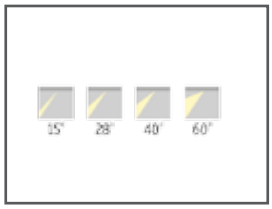

Applications

- Recessed Luminairs LED Downlight
- High efficiency facets aluminium reflectors
- Narrow Beam Angle
- Die-cast aluminum mounting ring,with system to fix it to the false ceiling using steel springs
- Die-cast heat sink with passive cooling
- Luminaires are equipped with electronic driver or with dimmable electronic driver on request
- IP44
- white, gray, black

Product Code	HN-TJ3065R-W30	HN-TJ3065R-N40	HN-TJ3065R-C50
Power(W)	10	10	10
Voltage(V)	220-240	220-240	220-240
DC(mA)	50	50	50
CCT(K)	3000	4000	5000
CRI	80	80	80
Beam Angle(°)	45/90	45/90	45/90
Hot Lumen(lm)	660	670	690
Power Factor	>0.9	>0.9	>0.9
Rated Life(°C)	-30~40	-30~40	-30~40
CTN(PCS)	12	12	12

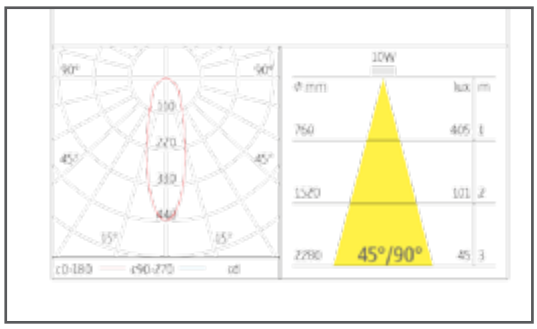

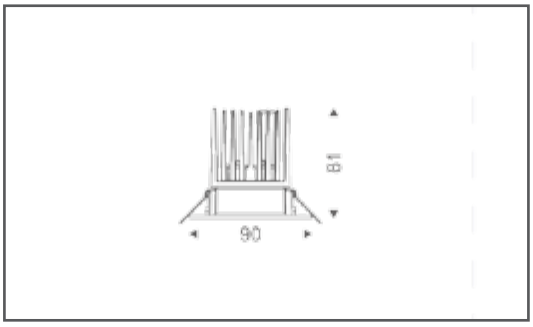

- ϕ70m (cut out)

LED DOWN LIGHT iDUVA - 3

- Cree

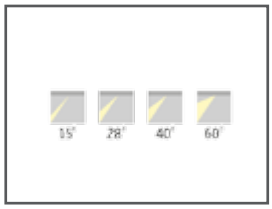

Applications

- Recessed Luminairs LED Downlight
- High efficiency facets aluminium reflectors
- Narrow/wide Beam Angle
- Die-cast aluminum mounting ring,with system to fix it to the false ceiling using steel springs
- Die-cast heat sinkwith passive cooling
- Luminaires are equipped with electronic driver or with dimmable electronic driver on request
- IP44
- white, gray, black

Product Code	HN-LB3065R-W30	HN-LB3065R-N40	HN-LB3065R-C50
Power(W)	10	10	10
Voltage(V)	220-240	220-240	220-240
DC(mA)	50	50	50
CCT(K)	3000	4000	5000
CRI	80	80	80
Beam Angle(°)	45/90	45/90	45/90
Hot Lumen(lm)	660	670	690
Power Factor	>0.9	>0.9	>0.9
Rated Life(°C)	-30~40	-30~40	-30~40
CTN(PCS)	12	12	12

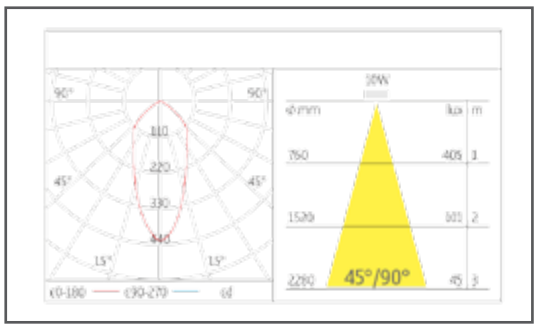

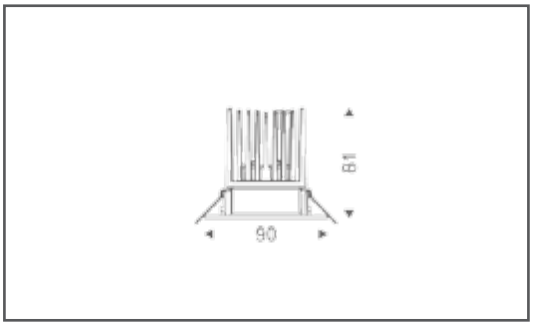

- ϕ70m (cut out)

LED DOWN LIGHT iDUVA AD

- Cree Xlamp CXA COB LED

Applications

- Adjustable recessed fixture for high-power LED Array with die-casting heat dissipater and spot optic in facets polycarbonate reflectors
- Narrow wide beam angle
- Energy saving and Economy

LED DOWN LIGHT iDUVA AD 1

- Cree

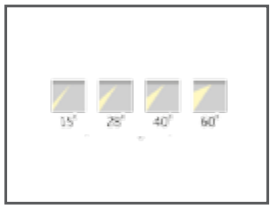

Applications

- Recessed Luminairs LED Downlight
- High efficiency facets aluminium reflectors
- Narrow/wide Beam Angle
- Die-cast aluminum mounting ring,with system to fix it to the false ceiling using steel springs
- Die-cast heat sinkwith passive cooling
- Luminaires are equipped with electronic driver or with dimmable electronic driver on request
- IP44
- white, gray, black

Product Code	HN-LB4065R-W30	HN-LB4065R-N40	HN-LB4065R-C50
Power(W)	10	10	10
Voltage(V)	220-240	220-240	220-240
DC(mA)	50	50	50
CCT(K)	3000	4000	5000
CRI	80	80	80
Beam Angle(°)	45/90	45/90	45/90
Hot Lumen(lm)	660	670	690
Power Factor	>0.9	>0.9	>0.9
Rated Life(°C)	-30~40	-30~40	-30~40
CTN(PCS)	12	12	12

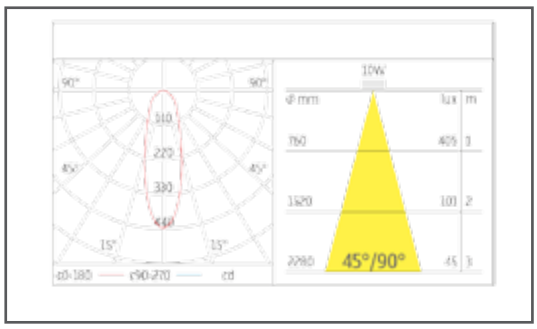

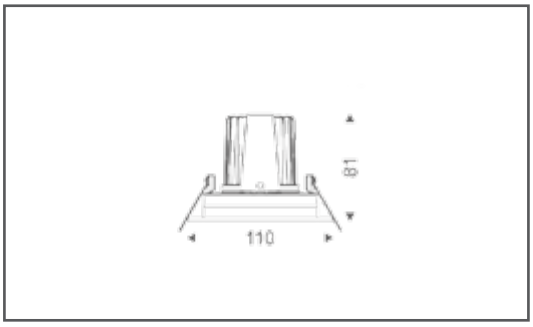

- ϕ90m (cut out)

LED DOWN LIGHT iDUVA AD 2

- Cree

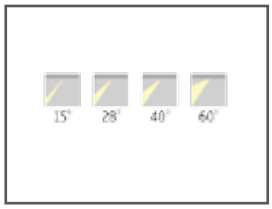

Applications

- Recessed Luminairs LED Downlight
- High efficiency facets aluminium reflectors
- Narrow/wide Beam Angle
- Die-cast aluminum mounting ring,with system to fix it to the false ceiling using steel springs
- Die-cast heat sinkwith passive cooling
- Luminaires are equipped with electronic driver or with dimmable electronic driver on request
- IP44
- white, gray, black

Product Code	HN-TJ406SR-W30	HN-T]406SR-N40	HN-T]406SR-C50
Power(W)	10	10	10
Voltage(V)	220-240	220-240	220-240
DC(mA)	50	50	50
CCT(K)	3000	4000	5000
CRI	80	80	80
Beam Angle(°)	45/90	45/90	45/90
Hot Lumen(lm)	660	670	690
Power Factor	>0.9	>0.9	>0.9
Rated Life(°C)	-30~40	-30~40	-30~40
CTN(PCS)	12	12	12

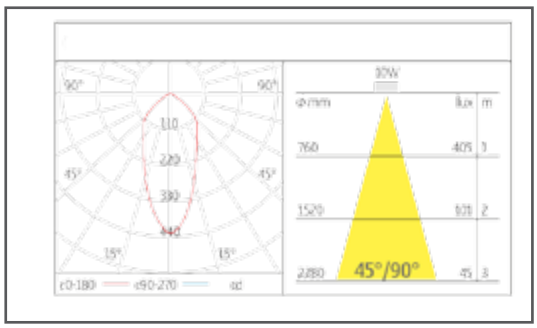

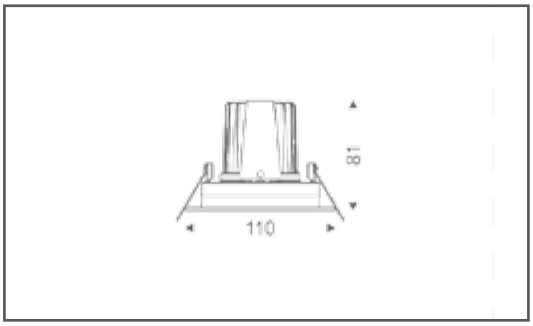

- ϕ90m (cut out)

LED DOWN LIGHT iDUVA AD 3

- Cree

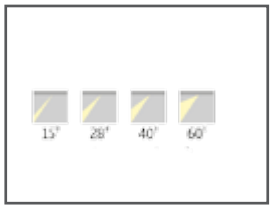

Applications

- Recessed Luminairs LED Downlight
- High efficiency facets aluminium reflectors
- Narrow/wide Beam Angle
- Die-cast aluminum mounting ring,with system to fix it to the false ceiling using steel springs
- Die-cast heat sinkwith passive cooling
- Luminaires are equipped with electronic driver or with dimmable electronic driver on request
- IP44
- white, gray, black

Product Code	HN-XB406SR-W30	HN-XB4065R-N40	HN-XB4065R-C50
Power(W)	10	10	10
Voltage(V)	220-240	220-240	220-240
DC(mA)	50	50	50
CCT(K)	3000	4000	5000
CRI	80	80	80
Beam Angle(°)	45/90	45/90	45/90
Hot Lumen(lm)	660	670	690
Power Factor	>0.9	>0.9	>0.9
Rated Life(°C)	-30~40	-30~40	-30~40
CTN(PCS)	12	12	12

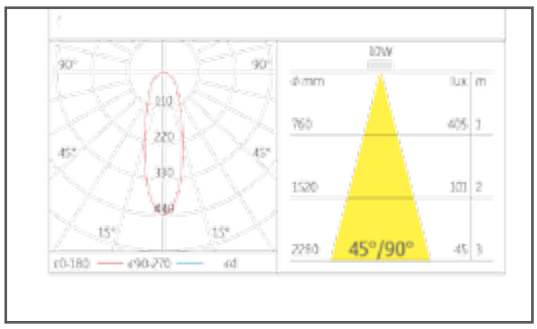

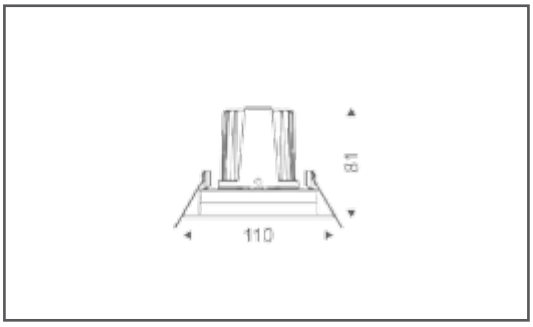

- ϕ90m (cut out)

LED DOWN LIGHT iDUVA SQ

- Cree Xlamp CXA COB LED

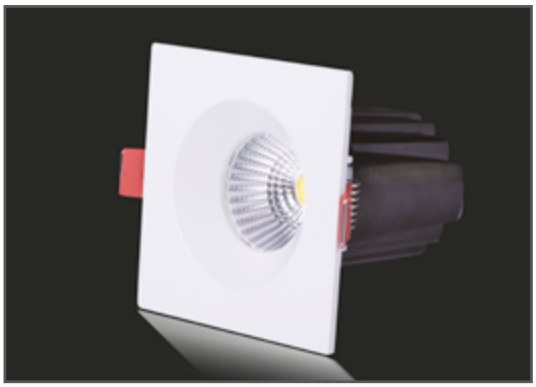

Applications

- High efficiency facets plastic reflectors
- Narrow wide beam angle
- Energy saving and Economy
- Die-cast. aluminium mounting ring, with system to fix it to the false ceiling using steel springs
- Widely used in high-class shop malls, offices and sales room etc.

LED DOWN LIGHT iDUVA SQ 1

- Cree

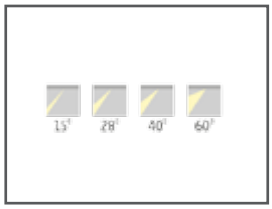

Applications

- Recessed Luminairs LED Downlight
- High efficiency facets aluminium reflectors
- Narrow/wide Beam Angle
- Die-cast aluminum mounting ring,with system to fix it to the false ceiling using steel springs
- Die-cast heat sinkwith passive cooling
- Luminaires are equipped with electronic driver or with dimmable electronic driver on request
- IP44
- white, gray, black

Product Code	HN-LB306SS-W30	HN-LB306S5-N40	HN-LB306S5-C50
Power(W)	10	10	10
Voltage(V)	220-240	220-240	220-240
DC(mA)	50	50	50
CCT(K)	3000	4000	5000
CRI	80	80	80
Beam Angle(°)	45/90	45/90	45/90
Hot Lumen(lm)	660	670	690
Power Factor	>0.9	>0.9	>0.9
Rated Life(°C)	-30~40	-30~40	-30~40
CTN(PCS)	12	12	12

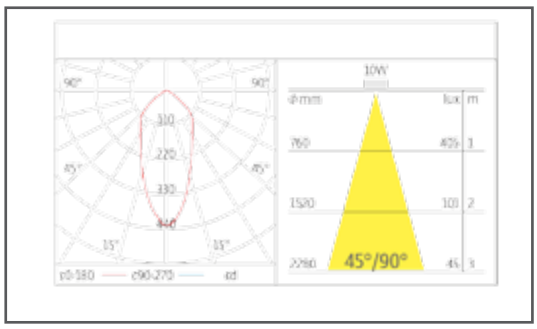

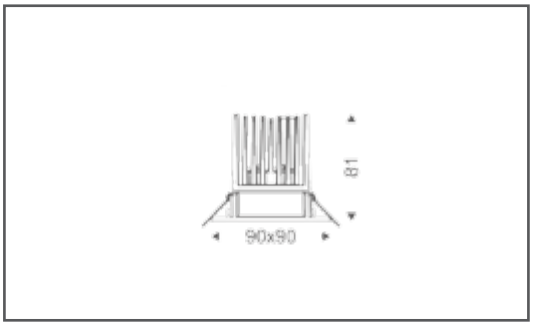

- ϕ70x70m (cut out)

LED DOWN LIGHT iDUVA SQ - 2

- Cree

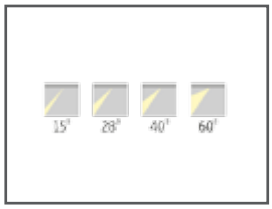

Applications

- Recessed Luminairs LED Downlight
- High efficiency facets aluminium reflectors
- Narrow/wide Beam Angle
- Die-cast aluminum mounting ring,with system to fix it to the false ceiling using steel springs
- Die-cast heat sink with passive cooling
- Luminaires are equipped with electronic driver or with dimmable electronic driver on request
- IP44
- white, gray, black

Product Code	HN-TJ06SS-W30	HN-TJ30655-N40	HN-Tj306SS-C50
Power(W)	10	10	10
Voltage(V)	220-240	220-240	220-240
DC(mA)	50	50	50
CCT(K)	3000	4000	5000
CRI	80	80	80
Beam Angle(°)	45/90	45/90	45/90
Hot Lumen(lm)	660	670	690
Power Factor	>0.9	>0.9	>0.9
Rated Life(°C)	-30~40	-30~40	-30~40
CTN(PCS)	12	12	12

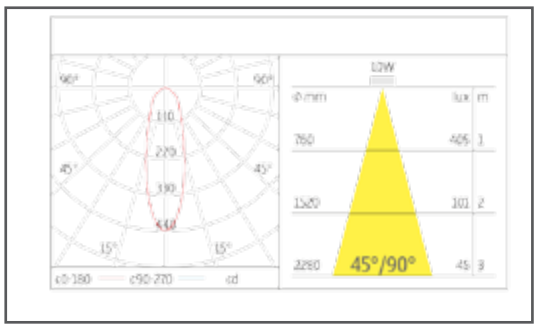

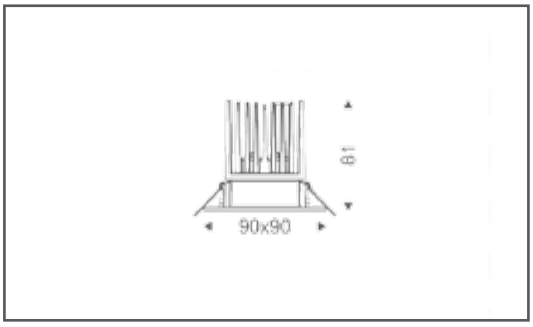

- ϕ70x70m (cut out)

LED DOWN LIGHT iDUVA SQ 3

- Cree

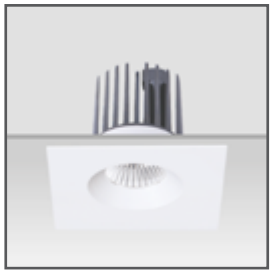

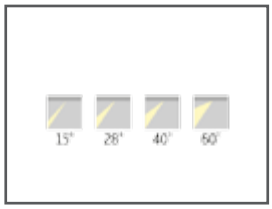

Applications

- Recessed Luminairs LED Downlight
- High efficiency facets aluminium reflectors
- Narrow/wide Beam Angle
- Die-cast aluminum mounting ring,with system to fix it to the false ceiling using steel springs
- Die-cast heat sinkwith passive cooling
- Luminaires are equipped with electronic driver or with dimmable electronic driver on request
- IP44
- white, gray, black

Product Code	HN-XB30655-W30	HN-XB30655-N40	HN-XB30655-C50
Power(W)	10	10	10
Voltage(V)	220-240	220-240	220-240
DC(mA)	50	50	50
CCT(K)	3000	4000	5000
CRI	80	80	80
Beam Angle(°)	45/90	45/90	45/90
Hot Lumen(lm)	660	670	690
Power Factor	>0.9	>0.9	>0.9
Rated Life(°C)	-30~40	-30~40	-30~40
CTN(PCS)	12	12	12

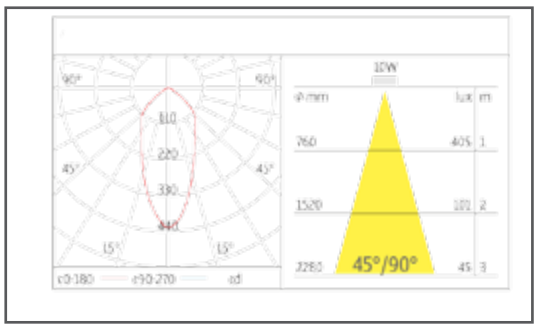

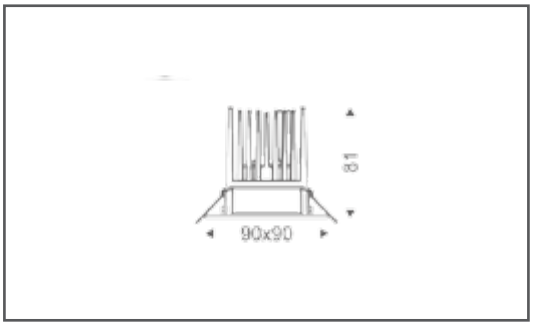

- ϕ70x70-m (cut out)

LED DOWN LIGHT iDUVA ADS

- Cree Xlamp CXA COB LED

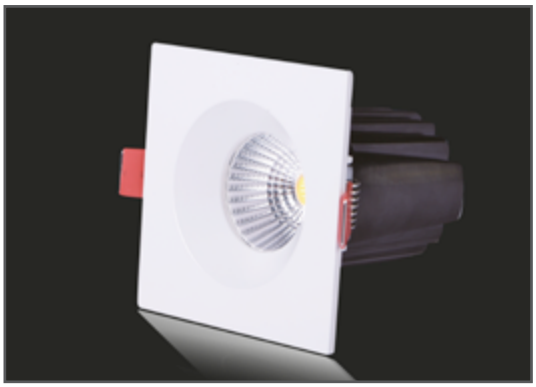

Applications

- Adjustable Recessed Luminairs AC LED Down-light
- High efficiency facets plastic reflectors
- Narrow wide beam angle
- Energy saving and Economy
- Die-cast. aluminium mounting ring, with system to fix it to the false ceiling using steel springs
- Widely used in high-class shop malls, offices and sales room etc.

LED DOWN LIGHT iDUVA ADS

- Cree

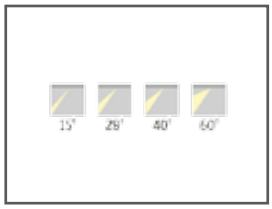

Applications

- Recessed Luminairs LED Downlight
- High efficiency facets aluminium reflectors
- Narrow/wide Beam Angle
- Die-cast aluminum mounting ring,with system to fix it to the false ceiling using steel springs
- Die-cast heat sinkwith passive cooling
- Luminaires are equipped with electronic driver or with dimmable electronic driver on request
- IP44
- white, gray, black

Product Code	HN-LB4065S-W30	HN-LB40655-N40	HN-LB4065S-C50
Power(W)	10	10	10
Voltage(V)	220-240	220-240	220-240
DC(mA)	50	50	50
CCT(K)	3000	3000	5000
CRI	80	80	80
Beam Angle(°)	45/90	45/90	45/90
Hot Lumen(lm)	660	670	690
Power Factor	>0.9	>0.9	>0.9
Rated Life(°C)	-30~40	-30~40	-30~40
CTN(PCS)	12	12	12

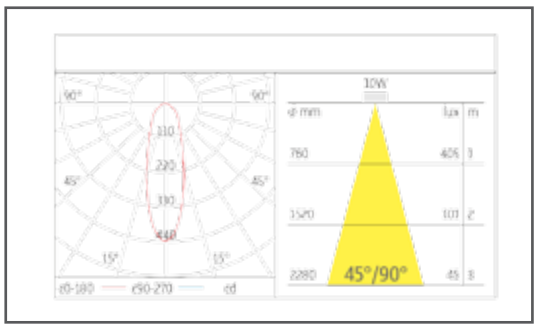

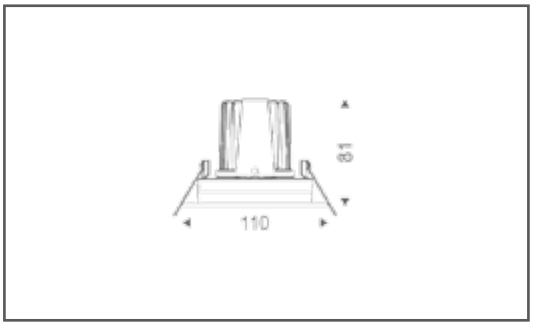

- ϕ90x90m (cut out)

LED DOWN LIGHT iDUVA ADS - 2

- Cree

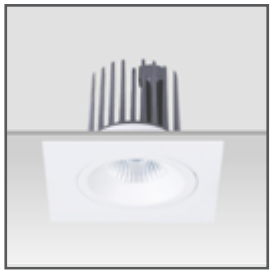

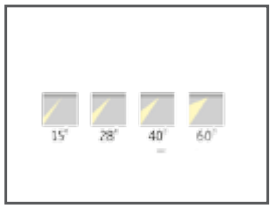

Applications

- Recessed Luminairs LED Downlight
- High efficiency facets aluminium reflectors
- Narrow/wide Beam Angle
- Die-cast aluminum mounting ring,with system to fix it to the false ceiling using steel springs
- Die-cast heat sinkwith passive cooling
- Luminaires are equipped with electronic driver or with dimmable electronic driver on request
- IP44
- white, gray, black

Product Code	HN-TJ40655-W30	HN-TJ40655-N40	HN-TJ40655-C50
Power(W)	10	10	10
Voltage(V)	220-240	220-240	220-240
DC(mA)	50	50	50
CCT(K)	4000	5000	3000
CRI	80	80	80
Beam Angle(°)	45/90	45/90	45/90
Hot Lumen(lm)	660	670	690
Power Factor	>0.9	>0.9	>0.9
Rated Life(°C)	-30~40	-30~40	-30~40
CTN(PCS)	12	12	12

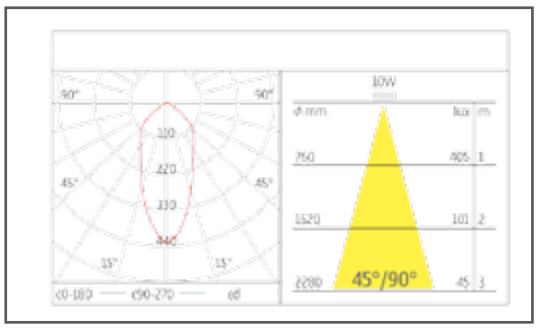

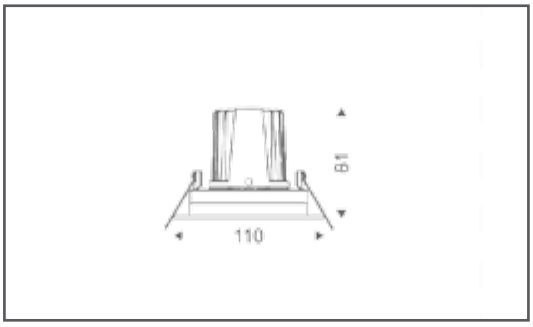

- ϕ90x90m (cut out)

LED DOWN LIGHT iDUVA ADS - 3

- Cree

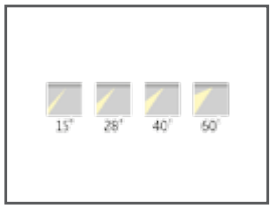

Applications

- Recessed Luminairs LED Downlight
- High efficiency facets aluminium reflectors
- Narrow/wide Beam Angle
- Die-cast aluminum mounting ring,with system to fix it to the false ceiling using steel springs
- Die-cast heat sinkwith passive cooling
- Luminaires are equipped with electronic driver or with dimmable electronic driver on request
- IP44
- white, gray, black

Product Code	HN-XB4065S-W30	HN-XB4065S-N40	HN-XB40655-C50
Power(W)	10	10	10
Voltage(V)	220-240	220-240	220-240
DC(mA)	50	50	50
CCT(K)	3000	3000	4000
CRI	80	80	80
Beam Angle(°)	45/90	45/90	45/90
Hot Lumen(lm)	660	670	690
Power Factor	>0.9	>0.9	>0.9
Rated Life(°C)	-30~40	-30~40	-30~40
CTN(PCS)	12	12	12

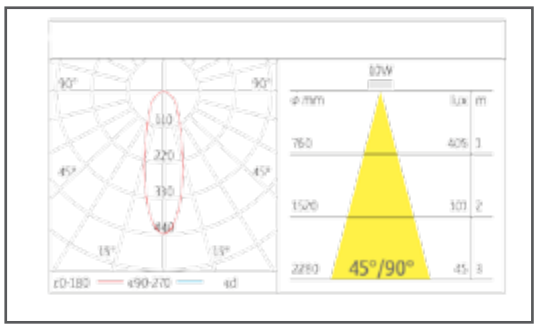

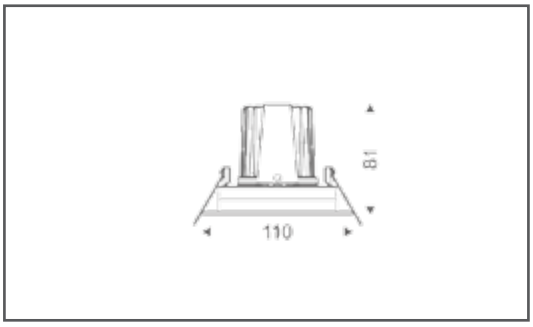

- ϕ90x90m (cut out)

LED DOWN LIGHT iDUVA ADS

- Cree Xlamp CXA COB LED

Applications

- VAGO series are adjustable fixtures
- Its illumination made your mood soft and comfortable.
- They are able to make several atmospheres with individual spots. These fixtures use by accent light in special shop like jewelly shop. department stores.

LED DOWN LIGHT VAGO

- Cree

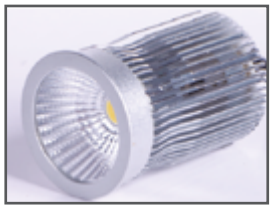

- 12W-740Lm

Applications

- Steel trim
- Al. die-casting adjustable ring, Electronic powder coated
- Adjustable Angle: both rings tilt <25°
- Steel housing
- Polycarbonate reflector
- Electronic driver including
- IP44

Part No.	LED 1 X 12W-W30
Input Voltage	AC100-240/50/60Hz
LED Power	12W
Color Temperature	3000K 4000K 5000K
CRI	>80 >80 >80
Luminous Flux	740Lm 760Lm 820Lm

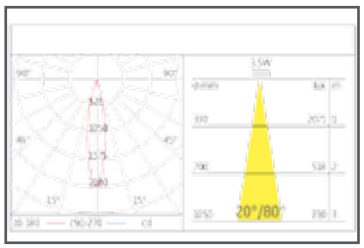

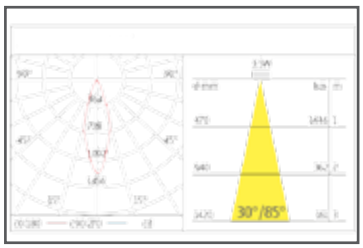

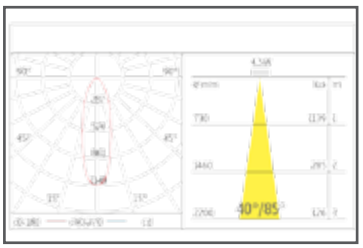

LED DOWN LIGHT VAGO

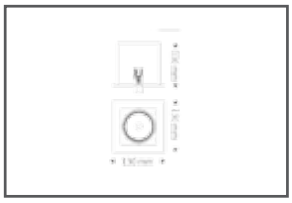

- HN-0321.1
- 1X 12W MR16(3000K, 4000K, 5000K)
- 115x115mm (Cut out)

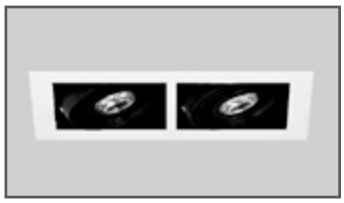
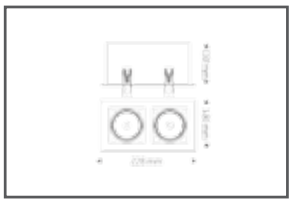

- HN-0322.1
- 1X 12W MR16(3000K, 4000K, 5000K)
- 210x115mm (Cut out)

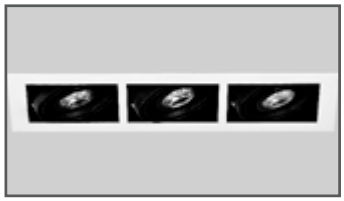
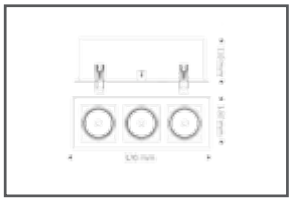

- HN-0323.1
- 1X 12W MR16(3000K, 4000K, 5000K)
- 310x115mm (Cut out)

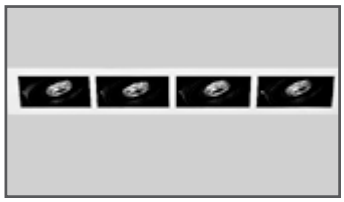
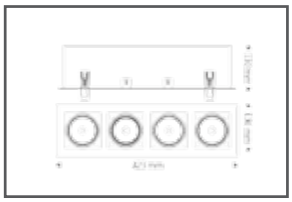

- HN-0324.1
- 1X 12W MR16(3000K, 4000K, 5000K)
- 410x115mm (Cut out)

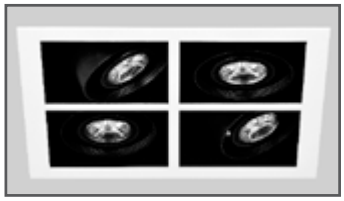
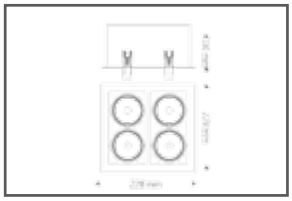

- HN-0325.1
- 1X 12W MR16(3000K, 4000K, 5000K)
- 210x210mm (Cut out)

LED DOWN LIGHT VAGO

- Cree

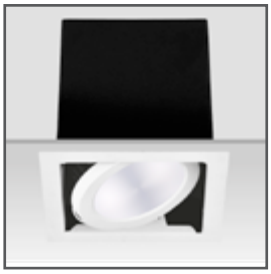

- 20W-1700Lm

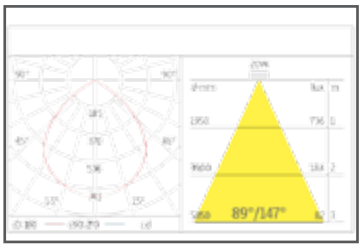

Applications

- Steel trim
- Al. die-casting adjustable ring, Electronic powder coated
- Adjustable Angle: both rings tilt <25°
- Steel housing
- Multi lens module
- Electronic driver including
- IP44

Part No.	AR111 - 20W		
Input Voltage	AC100-240/50/60Hz		
LED Power	20W		
Color Temperature	3000K	4000K	6500K
CRI	>80	>80	>70
Luminous Flux	1700Lm	1800Lm	1900Lm

LED DOWN LIGHT VAGO

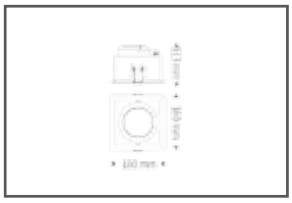

- HN-1611
- AR111 -20W(3000K, 4000K, 5000K)
- 165x165mm (Cut out)

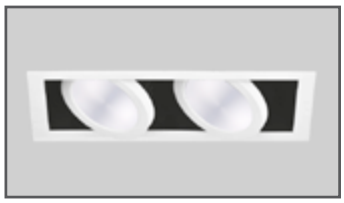
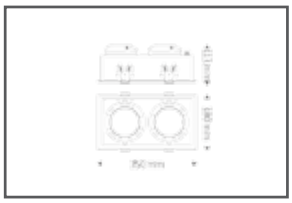

- HN-1612
- AR111 -20W(3000K, 4000K, 5000K)
- 330x165mm (Cut out)

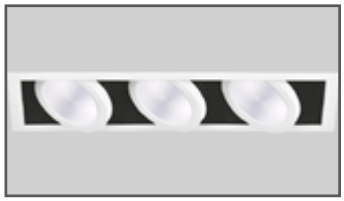
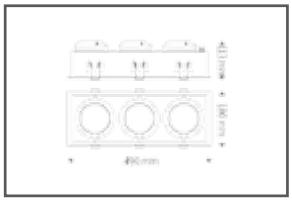

- HN-1613
- AR111 -20W(3000K, 4000K, 5000K)
- 475x165mm (Cut out)

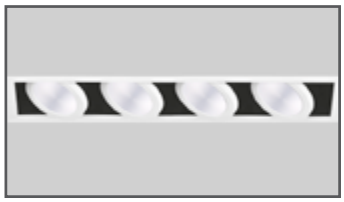
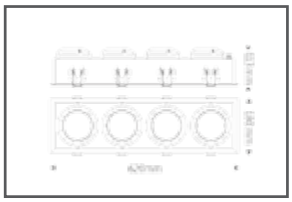

- HN-1614
- AR111 -20W(3000K, 4000K, 5000K)
- 610x165mm (Cut out)

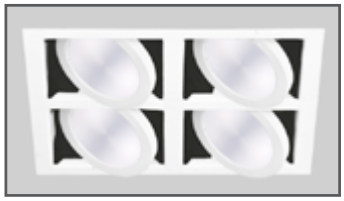
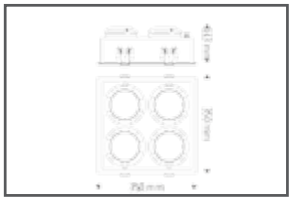

- HN-1615
- AR111 -20W(3000K, 4000K, 5000K)
- 330x330mm (Cut out)

LED DOWN LIGHT TORNADO IMS

- Cree Xlamp CXA COB LED

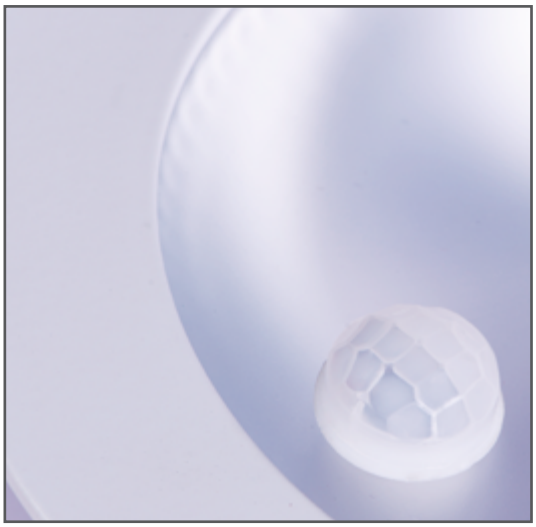

Applications

- TORNADO IMS - This product adopts high sensitivity detector, integrate circuit and SMD; It gathers automatic, convenient, safe, energy-saving, practical functions; It utilizes human motion infrared rays as control signal sources, when one enters the detection field, it will start the controlled load at once; It can identify day and night automatically; It is easy to install and its usage is widely.

LED DOWN LIGHT TORNADO IMS

- Samsung, LG

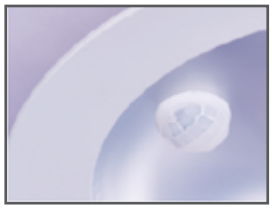

Applications

- Recessed Luminairs LED Downlight
- High efficiency facets aluminium reflectors
- Wide Beam Angle
- Fresnel lens
- Die-cast aluminum mounting ring,with system to fix it to the false ceiling using steel springs
- Die-cast heat sinkwith passive cooling
- Luminaires are equipped with electronic driver or with dimmable electronic driver on request
- IP44
- white, gray, black

Product Code	HN-SAM165IMS-W30	HN-SAM165IMS-N40	HN-SAM165IMS-C50
Power(W)	12	12	12
Voltage(V)	220-240	220-240	220-240
DC(mA)	350	350	350
CCT(K)	3000	4000	5000
CRI	80	80	80
Beam Angle(°)	72/129	72/129	72/129
Hot Lumen(lm)	960	980	1020
Power Factor	>0.5	>0.5	>0.5
Rated Life(°C)	-30~40	-30~40	-30~40
CTN(PCS)	12	12	12

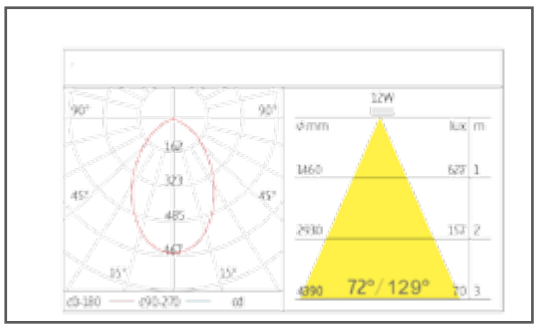

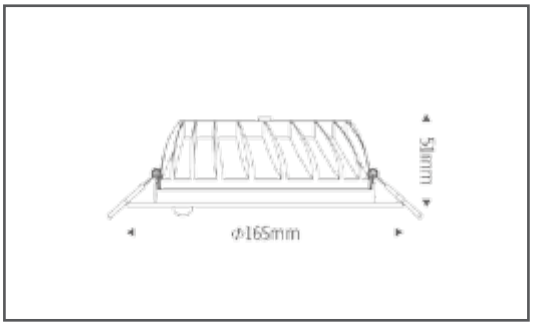

- ϕ150mm (cut out)

LED DOWN LIGHT TORNADO IMS 2

- Samsung, LG

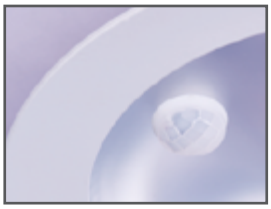

Applications

- Recessed Luminairs LED Downlight
- High efficiency facets aluminium reflectors
- Wide Beam Angle
- Fresnel lens
- Die-cast aluminum mounting ring,with system to fix it to the false ceiling using steel springs
- Die-cast heat sinkwith passive cooling
- Luminaires are equipped with electronic driver or with dimmable electronic driver on request
- IP44
- white, gray, black

Product Code	HN-SAM193IMS-W30	HN-SAM193IMS-N40	HN-SAM193IMS-C50
Power(W)	16	16	16
Voltage(V)	220-240	220-240	220-240
DC(mA)	350	350	350
CCT(K)	3000	4000	5000
CRI	80	80	80
Beam Angle(°)	72/131	72/131	72/131
Hot Lumen(lm)	1220	1240	1280
Power Factor	>0.5	>0.5	>0.5
Rated Life(°C)	-30~40	-30~40	-30~40
CTN(PCS)	12	12	12

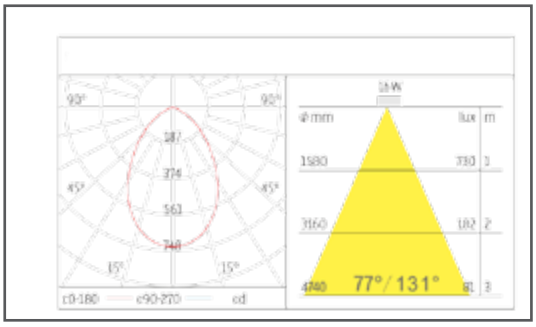

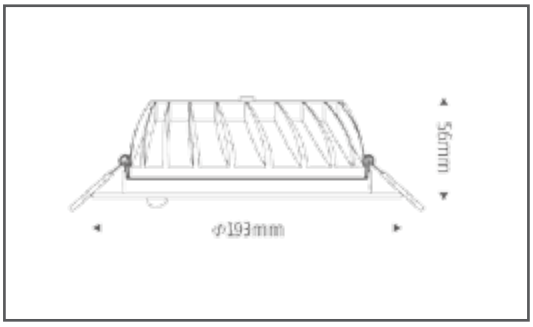

- ϕ180mm (cut out)

LED DOWN LIGHT TORNADO IMS 3

- Samsung, LG

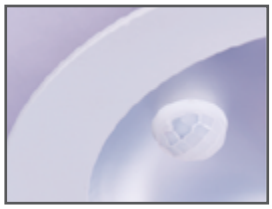

Applications

- Recessed Luminairs LED Downlight
- High efficiency facets aluminium reflectors
- Wide Beam Angle
- Fresnel lens
- Die-cast aluminum mounting ring,with system to fix it to the false ceiling using steel springs
- Die-cast heat sinkwith passive cooling
- Luminaires are equipped with electronic driver or with dimmable electronic driver on request
- IP44
- white, gray, black

Product Code	HN-SAM220IMS-W30	HN-SAM220IMS-N40	HN-SAM220IMS-C50
Power(W)	20	20	20
Voltage(V)	220-240	220-240	220-240
DC(mA)	500	500	500
CCT(K)	3000	4000	5000
CRI	80	80	80
Beam Angle(°)	70/125	70/125	70/125
Hot Lumen(lm)	1810	1840	1890
Power Factor	>0.95	>0.95	>0.95
Rated Life(°C)	-30~40	-30~40	-30~40
CTN(PCS)	12	12	12

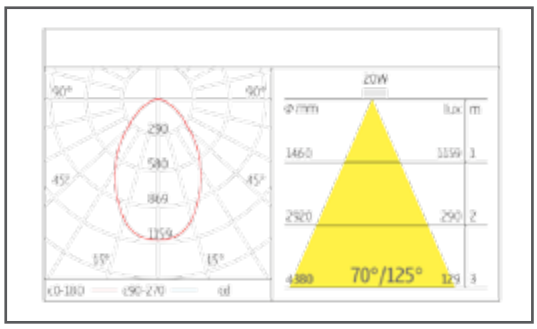

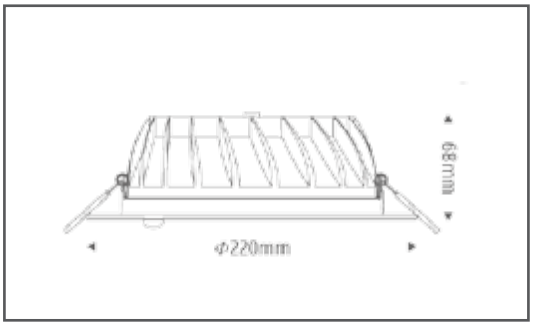

- ϕ200mm (cut out)

LED DOWN LIGHT TORNADO EM

- Samsung, LG

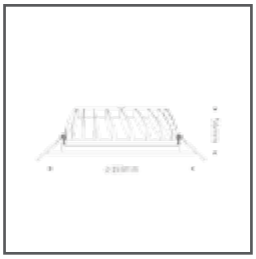

- ϕ200mm (cut out)

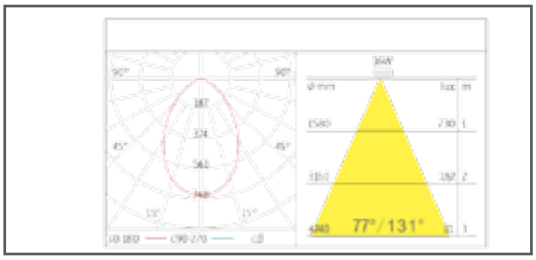

Applications

- Recessed Luminairs LED Downlight
- High efficiency facets aluminium reflectors
- Wide Beam Angle
- Fresnel lens
- Die-cast aluminum mounting ring,with system to fix it to the false ceiling using steel springs
- Die-cast heat sinkwith passive cooling
- Luminaires are equipped with electronic driver or with dimmable electronic driver on request
- IP44
- white, gray, black

Product Code	HN-SAM193EM-W30	HN-SAM193EM-N40	HN-SAM193EM-C50
Power(W)	16	16	16
Voltage(V)	220-240	220-240	220-240
DC(mA)	350	350	350
CCT(K)	3000	4000	5000
CRI	80	80	80
Beam Angle(°)	77/131	77/131	77/131
Hot Lumen(lm)	1220	1240	1280
Power Factor	>0.5	>0.5	>0.5
Rated Life(°C)	-30~40	-30~40	-30~40
CTN(PCS)	12	12	12

- TRIDONIC

LED DOWN LIGHT TORNADO EM 2

- Samsung, LG

- ϕ200mm (cut out)

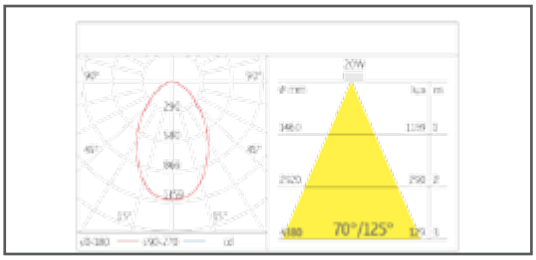

Applications

- Recessed Luminairs LED Downlight
- High efficiency facets aluminium reflectors
- Wide Beam Angle
- Fresnel lens
- Die-cast aluminum mounting ring,with system to fix it to the false ceiling using steel springs
- Die-cast heat sinkwith passive cooling
- Luminaires are equipped with electronic driver or with dimmable electronic driver on request
- IP44
- white, gray, black

Product Code	HN-SAM193EM-W30	HN-SAM193EM-N40	HN-SAM193EM-C50
Power(W)	16	16	16
Voltage(V)	220-240	220-240	220-240
DC(mA)	350	350	350
CCT(K)	3000	4000	5000
CRI	80	80	80
Beam Angle(°)	77/131	77/131	77/131
Hot Lumen(lm)	1220	1240	1280
Power Factor	>0.5	>0.5	>0.5
Rated Life(°C)	-30~40	-30~40	-30~40
CTN(PCS)	12	12	12

- TRIDONIC

LED DOWN LIGHT iTRACK

- Cree Xlamp CXA COB LED

Applications

- iTRACK - As the competition goes more and more fierce, light design and application of business stores have improved much. We are always persuing a light atmosphere of combing basic lighting, spotlighting. decorating and functional lighting. LED track light is the most frequently used spotlight. The LED track light in GAMA has made great progress in the output power of the lighting system through improving the technology of light control.

LED DOWN LIGHT iTRACK

- Samsung, LG

Applications

- Recessed Luminairs LED Downlight
- High efficiency facets aluminium reflectors
- wide Beam Angle
- Die-cast aluminum mounting ring,with system to fix itto the false ceiling using steel springs
- Luminaires are equipped with electronic driver or with dimmable electronic driver on request
- IP44
- white, gray, black

Product Code	HN- CR95-W30H	HN -CR95-W30	HN-CR95-N40	HN-CR95-C50
Power(W)	15	15	15	15
Voltage(V)	100-240	100-240	100-240	100-240
AC(mA)	350	350	350	350
CCT(K)	3000	3000	4000	5000
CRI	80	80	80	80
Beam Angle(°)	30/65	30/65	30/65	43/89
Hot Lumen(lm)	830	930	980	1030
Power Factor	>0.5	>0.5	>0.5-	0.5-
Rated Life(°C)	-30~40	-30~40	-30~40	-30~40
CTN(PCS)	12	12	12	12

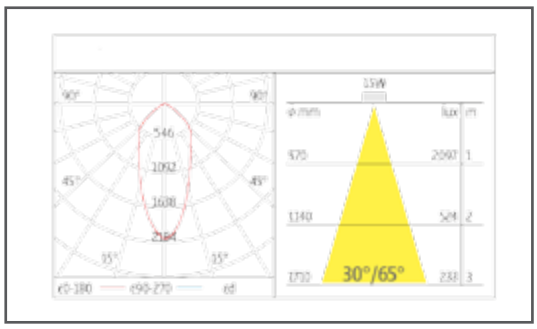

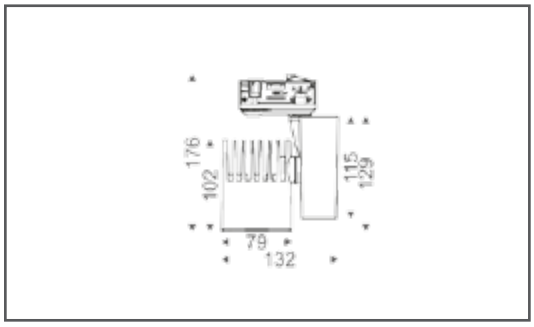

LED DOWN LIGHT iTRACK 2

- Samsung, LG

Applications

- Recessed Luminairs LED Downlight
- High efficiency facets aluminium reflectors
- wide Beam Angle
- Die-cast aluminum mounting ring,with system to fix itto the false ceiling using steel springs
- Luminaires are equipped with electronic driver or with dimmable electronic driver on request
- IP44
- white, gray, black

Product Code	HN- CR120-W30H	HN -CR120-W30	HN-CR120-N40	HN-CR120-C50
Power(W)	25	25	25	25
Voltage(V)	100-240	100-240	100-240	100-240
AC(mA)	600	600	600	600
CCT(K)	3000	3000	4000	5000
CRI	90	80	80	80
Beam Angle(°)	40/65	40/65	40/65	40/65
Hot Lumen(lm)	1500	1750	1850	1900
Power Factor	>0.95	>0.95	>0.95-	0.95-
Rated Life(°C)	-30~40	-30~40	-30~40	-30~40
CTN(PCS)	12	12	12	12

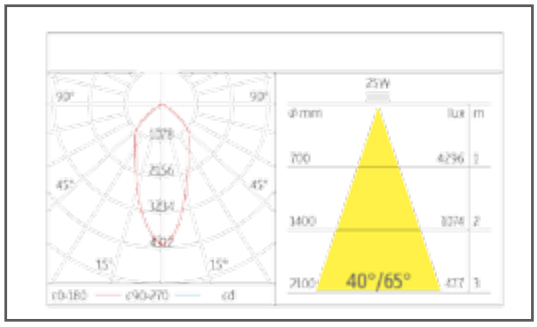

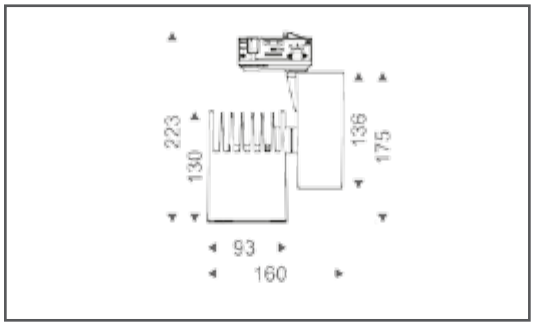

LED DOWN LIGHT iTRACK 3

- Samsung, LG

Applications

- Recessed Luminairs LED Downlight
- High efficiency facets aluminium reflectors
- wide Beam Angle
- Die-cast aluminum mounting ring,with system to fix itto the false ceiling using steel springs
- Luminaires are equipped with electronic driver or with dimmable electronic driver on request
- IP44
- white, gray, black

Product Code	HN- CR125-W30H	HN -CR125-W30	HN-CR125-N40	HN-CR125-C50
Power(W)	40	40	40	40
Voltage(V)	100-240	100-240	100-240	100-240
AC(mA)	1000	1000	1000	1000
CCT(K)	3000	3000	4000	5000
CRI	90	80	80	80
Beam Angle(°)	40/70	40/70	40/70	40/70
Hot Lumen(lm)	2350	2850	2900	3050
Power Factor	>0.95	>0.95	>0.95-	0.95-
Rated Life(°C)	-30~40	-30~40	-30~40	-30~40
CTN(PCS)	12	12	12	12

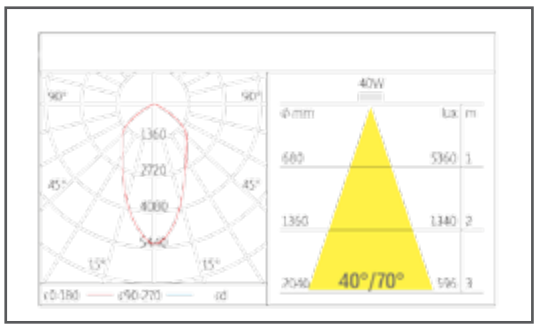

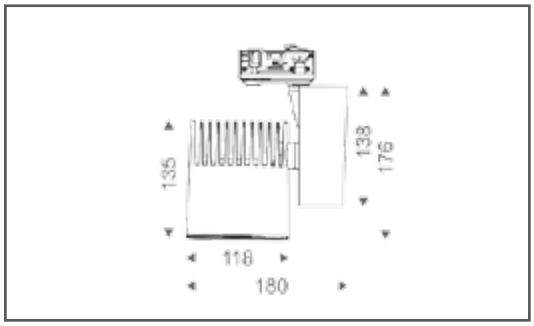

LED DOWN LIGHT iTRACK 4

- Samsung, LG

Applications

- Recessed Luminairs LED Downlight
- High efficiency facets aluminium reflectors
- Wide Beam Angle
- Clear glass/frosted glass upon request
- Die-cast aluminum mounting ring,with system to fix itto the false ceiling using steel springs
- Luminaires are equipped with electronic driver or with dimmable electronic driver on request
- IP44
- white, gray, black

Product Code	HN- CR130-W30H	HN -CR130-W30	HN-CR130-N40	HN-CR130-C50
Power(W)	60	60	60	60
Voltage(V)	100-240	100-240	100-240	100-240
AC(mA)	1400	1400	1400	1400
CCT(K)	3000	3000	4000	5000
CRI	90	80	80	80
Beam Angle(°)	40/75	40/75	40/75	40/75
Hot Lumen(lm)	3150	3550	3800	3800
Power Factor	>0.95	>0.95	>0.95-	0.95-
Rated Life(°C)	-30~40	-30~40	-30~40	-30~40
CTN(PCS)	6	6	6	6

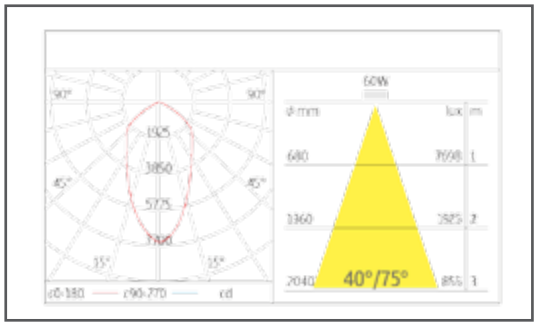

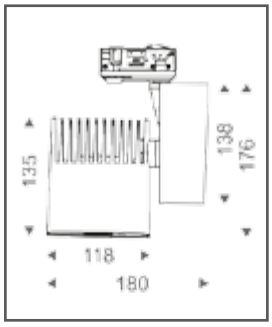

- SYNJET

LED DOWN LIGHT iTRACK 5

- Samsung, LG

Applications

- Recessed Luminairs LED Downlight
- High efficiency facets aluminium reflectors
- Wide Beam Angle
- Clear glass/ frosted glass upon request
- Die-cast aluminum mounting ring,with system to fix itto the false ceiling using steel springs
- Luminaires are equipped with electronic driver or with dimmable electronic driver on request
- IP44
- white, gray, black

Product Code	HN- CR135-W30H	HN -CR135-W30	HN-CR135-N40	HN-CR135-C50
Power(W)	65	65	65	65
Voltage(V)	100-240	100-240	100-240	100-240
AC(mA)	1500	1500	1500	1500
CCT(K)	3000	3000	4000	5000
CRI	90	80	80	80
Beam Angle(°)	40/75	40/75	40/75	40/75
Hot Lumen(lm)	3450	3900	4050	4200
Power Factor	>0.95	>0.95	>0.95-	0.95-
Rated Life(°C)	-30~40	-30~40	-30~40	-30~40
CTN(PCS)	6	6	6	6

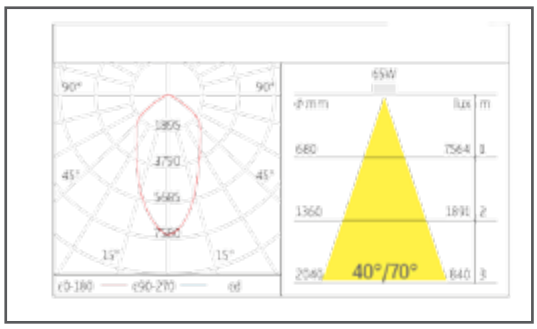

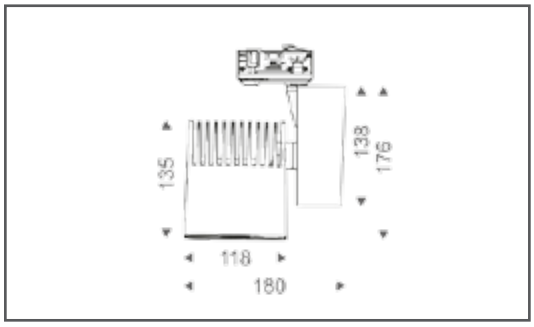

LED DOWN LIGHT PAR30

- Samsung, LG

Applications

- Fitting with universal Track Adaptor
- Easy fitment to 3 Circuit Track.
- Aluminium Housing with Air Ventilation.
- Power Coated Finish.
- Full 350 deg Adjustment,Including Tilt Adjustment
- Light weight material.
- IP44

Product Code	HN- PAR38-W30	HN -PAR38-W30	HN-PAR38-W30
Power(W)	13	13	13
Voltage(V)	100-240	100-240	100-240
DC(mA)			
CCT(K)	3000	4000	5000
CRI	90	75	75
Beam Angle(°)	30/50	30/50	30/50
Hot Lumen(lm)	800	850	880
Power Factor	>0.5	>0.5	>0.5-
Rated Life(°C)	-30~40	-30~40	-30~40
CTN(PCS)	24	24	24

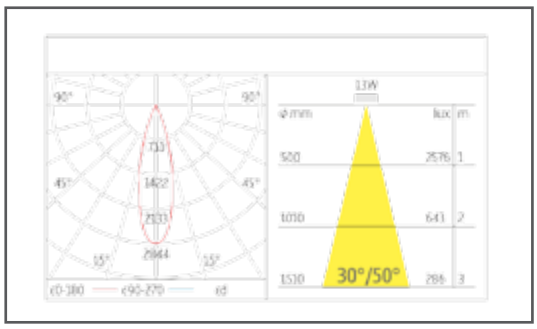

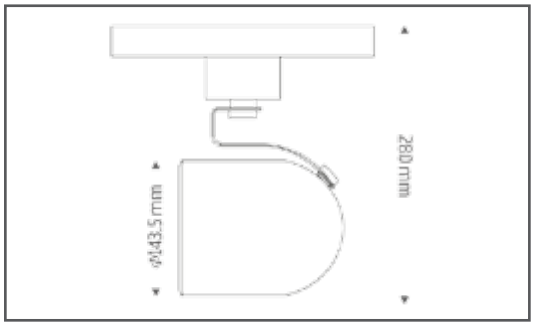

LED DOWN LIGHT PAR20

- Samsung, LG

Applications

- Fitting with universal Track Adaptor
- Easy fitment to 3 Circuit Track.
- Aluminium Housing with Air Ventilation.
- Power Coated Finish.
- Full 350 deg Adjustment,Including Tilt Adjustment
- Light weight material.
- IP44

Product Code	HN- PAR20-W30	HN -PAR20-W30	HN-PAR20-W30
Power(W)	6	6	6
Voltage(V)	100-240	100-240	100-240
DC(mA)			
CCT(K)	3000	4000	5000
CRI	80	75	75
Beam Angle(°)	30/55	30/55	30/55
Hot Lumen(lm)	270	330	370
Power Factor	>0.5	>0.5	>0.5-
Rated Life(°C)	-30~40	-30~40	-30~40
CTN(PCS)	24	24	24

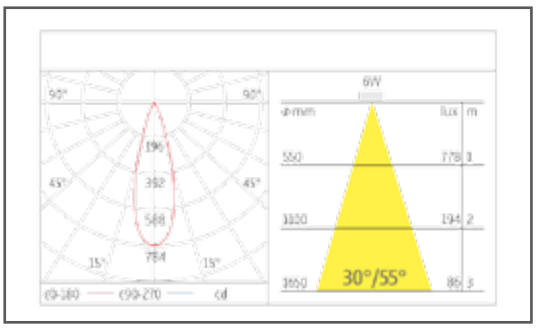

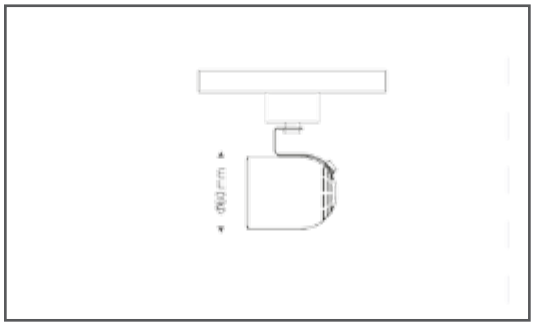

LED DOWN LIGHT PAR30

- Samsung, LG

Applications

- Fitting with universal Track Adaptor
- Easy fitment to 3 Circuit Track.
- Aluminium Housing with Air Ventilation.
- Power Coated Finish.
- Full 350 deg Adjustment,Including Tilt Adjustment
- Light weight material.
- IP44

Product Code	HN- PAR30-W30	HN -PAR30-W30	HN-PAR30-W30
Power(W)	9	9	9
Voltage(V)	100-240	100-240	100-240
DC(mA)			
CCT(K)	3000	4000	5000
CRI	80	75	75
Beam Angle(°)	30/60	30/60	30/60
Hot Lumen(lm)	500	540	590
Power Factor	>0.5	>0.5	>0.5-
Rated Life(°C)	-30~40	-30~40	-30~40
CTN(PCS)	24	24	24

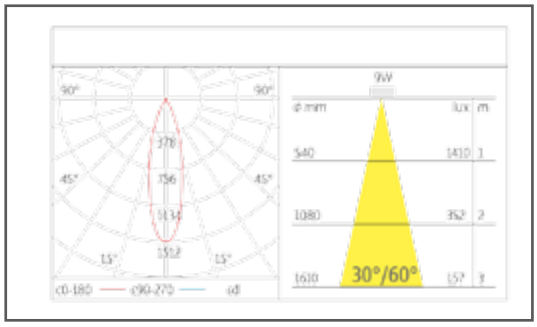

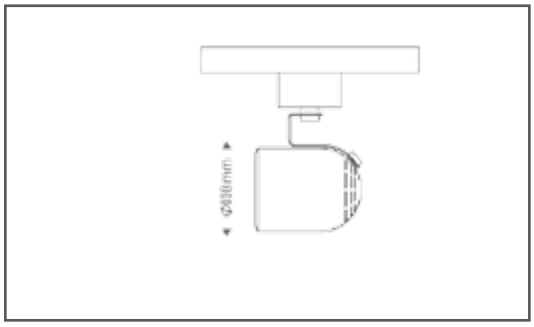

LED DOWN LIGHT DOME

- Cree Xlamp CXA COB LED

Applications

- Outstanding efficiency light comparable light output for up to 70% less power consumption.
- Excellent light quality levels maintained far longer than conventional lighting which can lose up to 70% of their brightness in 12 months. With no UV or infrared.
- Heavy duty, long life lighting for 50000 hours lifespan, up to 5 times longer than conventional lighting.
- Lower maintenance costs; no need globles to replace, no need for costly programmed maintenance.
- Instant on after power outages.
- No warm up for Our LED high bay lights are at full intensity seconds after you turn them on. No more waiting for lights to warm up.
- A better workplace can have a dramatic effect. Your staff will show their appreciation with their increased productivity.
- Environment friendly, by using less power can help to reduce carbon emissions contributing to saing the environment as well as saving you money.

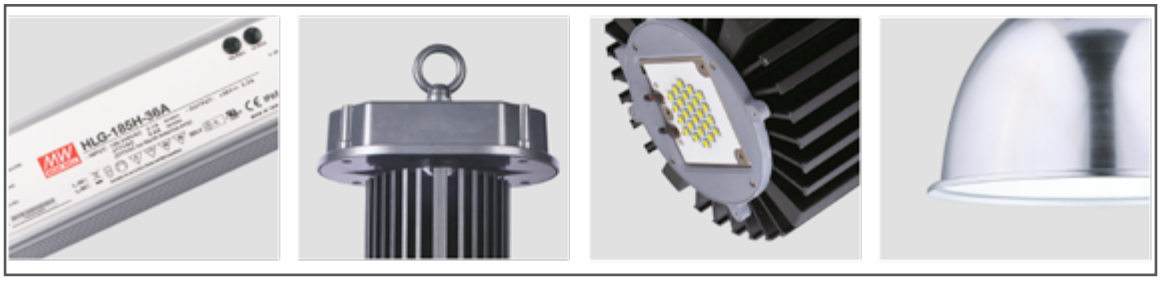

LED DOWN LIGHT DOME -1

- Cree

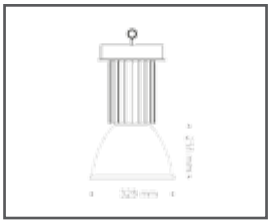

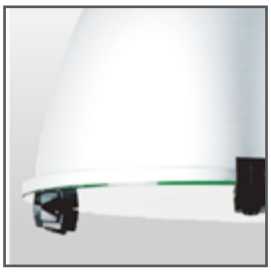

- HN-LB05012G

Applications

- Aluminium extrude heatsink for passive solution with beter consistent application
- Al.extrude gear box,electrophoretic coated
- Aluminium reflector with frosted finished inside
- The high bay offers a competitive high lighting solution for industrial environments requiring strong product resistance agianst either chemical agents or warm and dusty atmos-pheres
- Anti-glare polycarbonate tube
- Suspension Kits include with upon request for lens for suspension length
- IP44
- white, gray, black

Product Code	HN-LB05012-N40	HN-LB05012-C50
Power(W)	50	50
Voltage(V)	176-264	176-264
DC(mA)	2.3	2.3
CCT(K)	4000	5000
CRI	75	75
Beam Angle(°)	40/85	40/85
Hot Lumen(lm)	3225	3710
Power Factor	>0.95	>0.95
Rated Life(°C)	-30~40	-30~40
CTN(PCS)	1	1

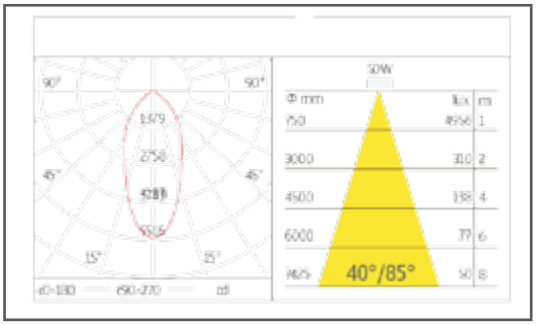

LED DOWN LIGHT DOME -2

- Cree

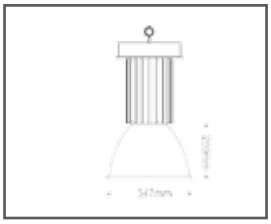

- HN-LB07514

Applications

- Aluminium extrude heatsink for passive solution with beter consistent application
- Al.extrude gear box,electrophoretic coated
- Aluminium reflector with frosted finished inside
- The high bay offers a competitive high lighting solution for industrial environments requiring strong product resistance agianst either chemical agents or warm and dusty atmos-pheres
- Anti-glare polycarbonate tube
- Suspension Kits include with upon request for lens for suspension length
- IP44
- white, gray, black

Product Code	HN-LB07514-N40	HN-LB07514-C50
Power(W)	75	75
Voltage(V)	176-264	176-264
DC(mA)	2.3	2.3
CCT(K)	4000	5000
CRI	70	70
Beam Angle(°)	40/90	40/90
Hot Lumen(lm)	5550	5850
Power Factor	>0.95	>0.95
Rated Life(°C)	-30~40	-30~40
CTN(PCS)	1	1

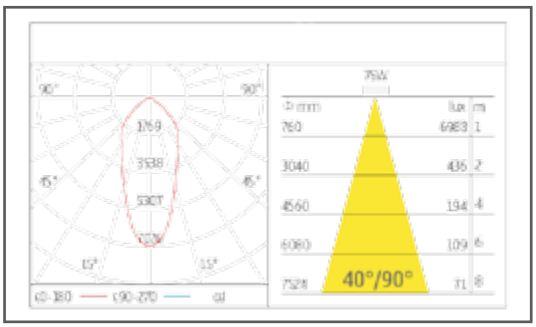

LED DOWN LIGHT DOME -3

- Cree

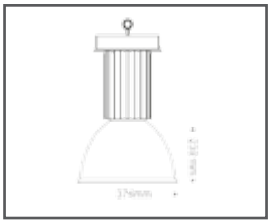

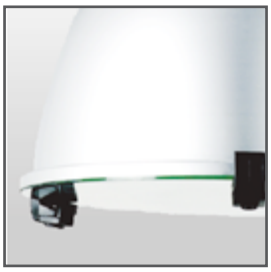

- HN-HB10014G

Applications

- Aluminium extrude heatsink for passive solution with beter consistent application
- Al.extrude gear box,electrophoretic coated
- Aluminium reflector with frosted finished inside
- The high bay offers a competitive high lighting solution for industrial environments requiring strong product resistance agianst either chemical agents or warm and dusty atmos-pheres
- Anti-glare polycarbonate tube
- Suspension Kits include with upon request for lens for suspension length
- IP44
- white, gray, black

Product Code	HN-HB10014-N40	HN-HB10014-C50
Power(W)	100	100
Voltage(V)	176-264	176-264
DC(mA)	2.6	2.6
CCT(K)	4000	5000
CRI	70	70
Beam Angle(°)	40/90	40/90
Hot Lumen(lm)	7700	7950
Power Factor	>0.95	>0.95
Rated Life(°C)	-30~40	-30~40
CTN(PCS)	1	1

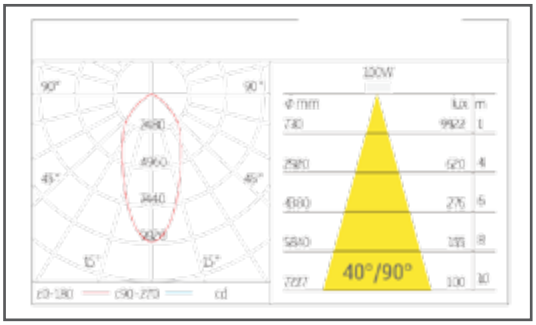

LED DOWN LIGHT DOME -4

- Cree

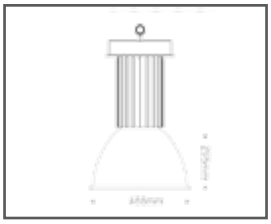

- HN-HB1501BG

Applications

- Aluminium extrude heatsink for passive solution with beter consistent application
- Al.extrude gear box,electrophoretic coated
- Aluminium reflector with frosted finished inside
- The high bay offers a competitive high lighting solution for industrial environments requiring strong product resistance agianst either chemical agents or warm and dusty atmos-pheres
- Anti-glare polycarbonate tube
- Suspension Kits include with upon request for lens for suspension length
- IP44
- white, gray, black

Product Code	HN-HB15018-N40	HN-HB15018-C50
Power(W)	150	150
Voltage(V)	176-264	176-264
DC(mA)	2.4	2.4
CCT(K)	4000	5000
CRI	70	70
Beam Angle(°)	80/100	80/100
Hot Lumen(lm)	10500	11100
Power Factor	>0.95	>0.95
Rated Life(°C)	-30~40	-30~40
CTN(PCS)	1	1

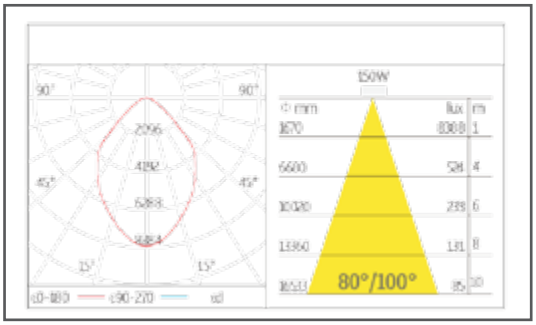

LED DOWN LIGHT DOME -5

- Cree

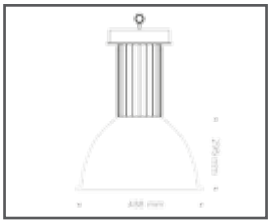

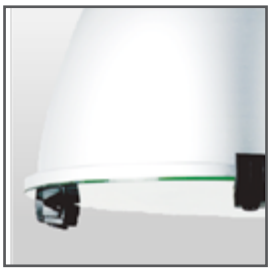

- HN-HB20018G

Applications

- Aluminium extrude heatsink for passive solution with beter consistent application
- Al.extrude gear box,electrophoretic coated
- Aluminium reflector with frosted finished inside
- The high bay offers a competitive high lighting solution for industrial environments requiring strong product resistance agianst either chemical agents or warm and dusty atmos-pheres
- Anti-glare polycarbonate tube
- Suspension Kits include with upon request for lens for suspension length
- IP44
- white, gray, black

Product Code	HN-HB20018-N40	HN-HB20018-C50
Power(W)	200	200
Voltage(V)	176-264	176-264
DC(mA)	2.4	2.4
CCT(K)	4000	5000
CRI	70	70
Beam Angle(°)	80/100	80/100
Hot Lumen(lm)	14850	15650
Power Factor	>0.95	>0.95
Rated Life(°C)	-30~40	-30~40
CTN(PCS)	1	1

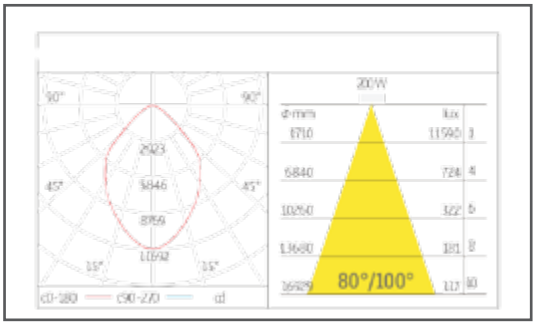

LED DOWN LIGHT DOME

- Cree Xlamp CXA COB LED

Applications

- Outstanding efficiency light comparable light output for up to 70% less power consumption.
- Excellent light quality levels maintained far longer than conventional lighting which can lose up to 70% of their brightness in 12 months. With no UV or infrared.
- Heavy duty, long life lighting for 50000 hours lifespan, up to 5 times longer than conventional lighting.
- Lower maintenance costs; no need globles to replace, no need for costly programmed maintenance.
- Instant on after power outages.
- No warm up for Our LED high bay lights are at full intensity seconds after you turn them on. No more waiting for lights to warm up.
- A better workplace can have a dramatic effect. Your staff will show their appreciation with their increased productivity.
- Environment friendly, by using less power can help to reduce carbon emissions contributing to saing the environment as well as saving you money.

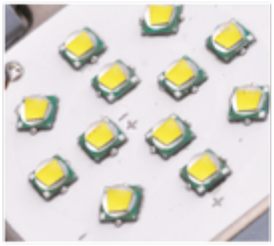
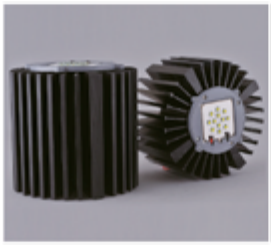

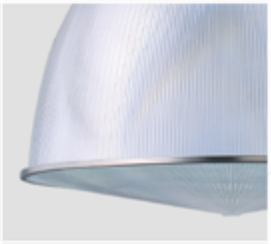

LED DOWN LIGHT DOME

- Cree

Applications

- Aluminium extrude heatsink for passive solution with beter consistent application
- Al.extrude gear box,electrophoretic coated
- PMMA reflector
- The high bay offers a competitive high lighting solution for industrial environments requiring strong product resistance agianst either chemical agents or warm and dusty atmos-pheres
- Anti-glare polycarbonate tube
- Suspension Kits include with upon request for lens for suspension length
- IP44
- white, gray, black

Product Code	HN-HBPC05012-N40	HN-HBPC05012-C50
Power(W)	50	50
Voltage(V)	176-264	176-264
DC(mA)	2.3	2.3
CCT(K)	4000	5000
CRI	70	70
Beam Angle(°)	60/85	60/85
Hot Lumen(lm)	3200	3350
Power Factor	>0.95	>0.95
Rated Life(°C)	-30~40	-30~40
CTN(PCS)	1	1

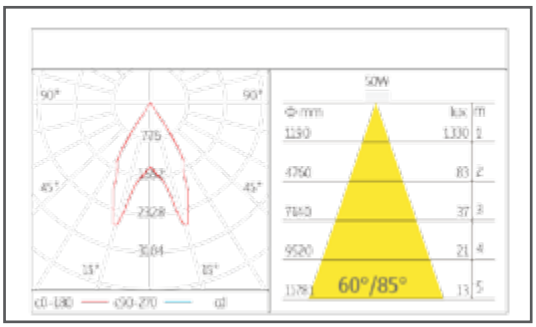

LED DOWN LIGHT DOME 2

- Cree

Applications

- Aluminium extrude heatsink for passive solution with beter consistent application
- Al.extrude gear box,electrophoretic coated
- PMMA reflector
- The high bay offers a competitive high lighting solution for industrial environments requiring strong product resistance agianst either chemical agents or warm and dusty atmos-pheres
- Anti-glare polycarbonate tube
- Suspension Kits include with upon request for lens for suspension length
- IP44
- white, gray, black

Product Code	HN-HBPC05012-N40	HN-HBPC05012-C50
Power(W)	75	75
Voltage(V)	176-264	176-264
DC(mA)	2.3	2.3
CCT(K)	4000	6000
CRI	70	70
Beam Angle(°)	65/115	65/115
Hot Lumen(lm)	4850	5100
Power Factor	>0.95	>0.95
Rated Life(°C)	-30~40	-30~40
CTN(PCS)	1	1

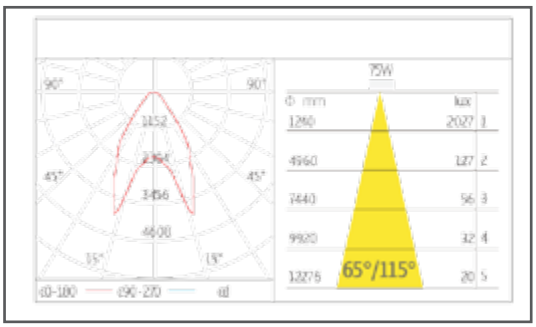

LED DOWN LIGHT DOME 3

- Cree

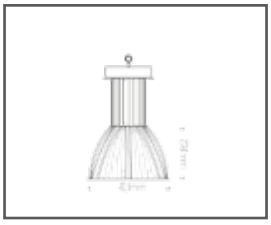

Applications

- Aluminium extrude heatsink for passive solution with beter consistent application
- Al.extrude gear box,electrophoretic coated
- PMMA reflector
- The high bay offers a competitive high lighting solution for industrial environments requiring strong product resistance agianst either chemical agents or warm and dusty atmos-pheres
- Anti-glare polycarbonate tube
- Suspension Kits include with upon request for lens for suspension length
- IP44
- white, gray, black

Product Code	HN-HBPC10016-N40	HN-HBPC10016-C50
Power(W)	100	100
Voltage(V)	176-264	176-264
DC(mA)	2.6	2.6
CCT(K)	4000	5000
CRI	70	70
Beam Angle(°)	70/120	70/120
Hot Lumen(lm)	7150	7550
Power Factor	>0.95	>0.95
Rated Life(°C)	-30~40	-30~40
CTN(PCS)	1	1

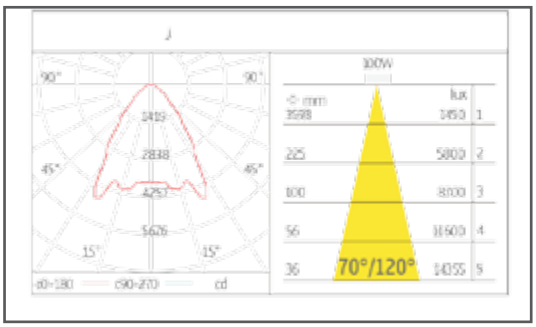

LED DOWN LIGHT Xoval

- Cree Xlamp CXA COB LED

Applications

- Xoval is a modular lighting system that enables relation between light and architecture most effectively.Availables as singular luminaire with different optics to satisfy usedr's needs Slender,powerful,efficient.
- continuum introduces a uniquely clean,simple lighting system offering continuous,highly uniform lines of light across walls and ceilings.
- Suitable for offices,meeting rooms,corridors, education facilities,museums and libraries Every batten has a plug and socket arrange-ment for easy and rapid electrical installtion

HIGHT XOVAL PEND

- Samsung, LG

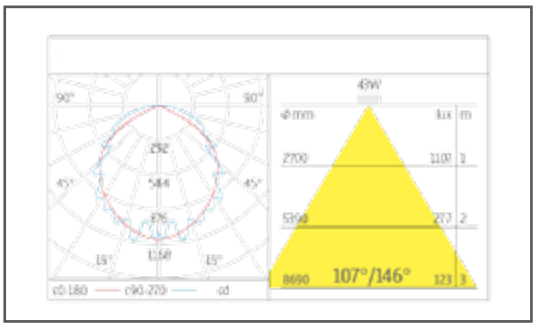

Applications

- Suspended luminaires for LED chips
- Body of aluminium extrude
- Cover finished with PMMA
- Luminaires are equipped with electronic driver
- Various types of suspension accessories-to be ordered separately
- IP20

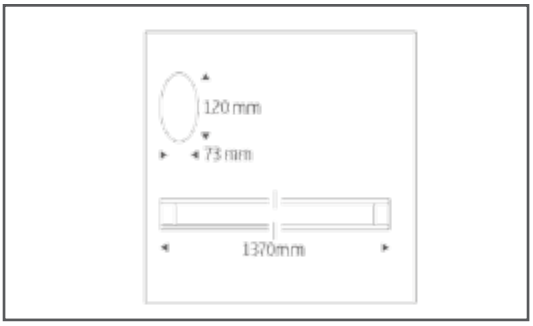

Part No.	HN-U9
Input Voltage	AC100-240
LED Power	43W
Color Temperature	6000K
CRI	>75

- Option 1 L Corner
- Option 2 T Corner
- Option 3 Cross Corner

HIGHT XOVAL PEND

- Samsung, LG

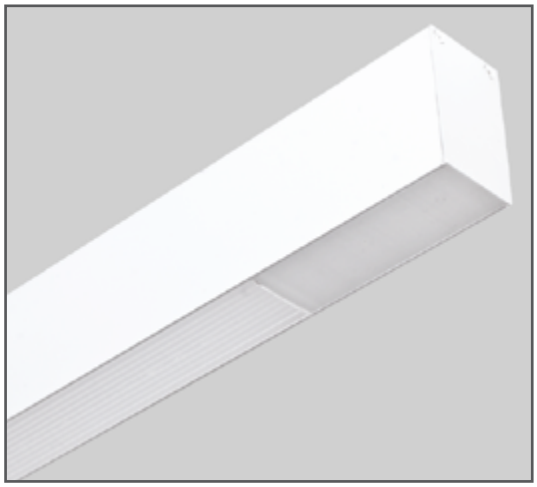

Applications

- Suspended luminaires for LED chips
- Body of aluminium extrude
- Cover finished with PMMA
- Luminaires are equipped with electronic driver
- Various types of suspension accessories-to be ordered separately
- IP20

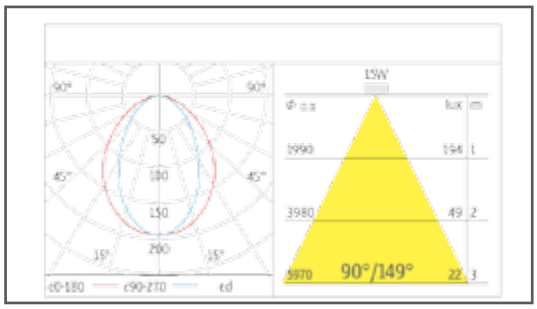

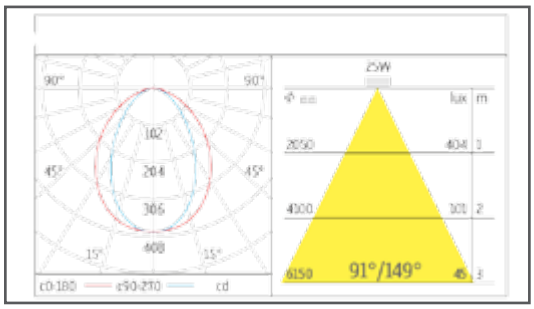

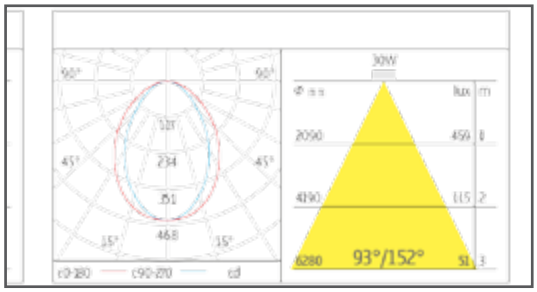

HIGHT XOVAL PEND

- Samsung, LG

Part No.	HN-UX60	HN-UX12	HN-UX50
Input Voltage	AC220-240	AC220-240	AC220-240
LED Power	15W	25W	30W
Color Temperature	3000K	3000K	3000K
CRI	>80	>75	>70

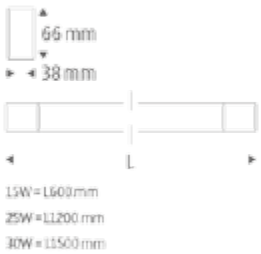

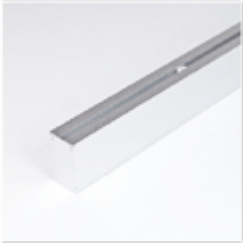

- Option 1
  L Corner
- Option 2
  T Corner
- Option 3
  Cross Corner

HIGHT XOVAL PEND

- Samsung, LG

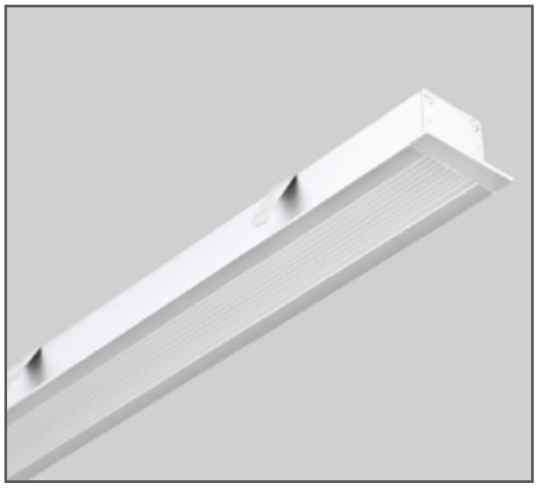

Applications

- Suspended luminaires for LED chips
- Body of aluminium extrude
- Cover finished with PMMA
- Luminaires are equipped with electronic driver
- Various types of suspension accessories-to be ordered separately
- IP20

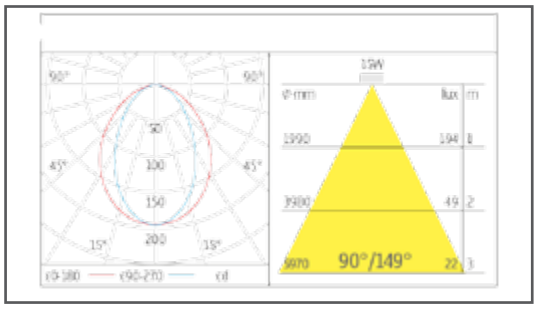

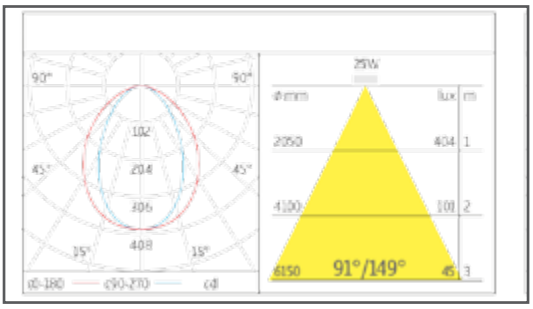

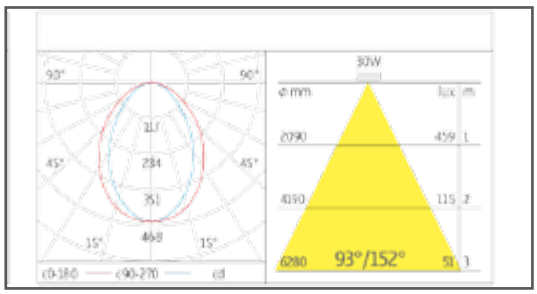

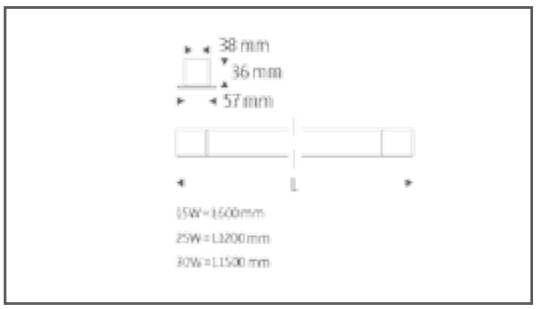

Part No.	HN-U60	HN-U120	HN-U150
Input Voltage	AC220-240	AC220-240	AC220-240
LED Power	15W	25W	30W
Color Temperature	3000K	3000K	3000K
CRI	>80	>75	>70

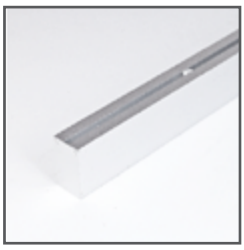

HIGHT XOVAL PEND

- Samsung, LG

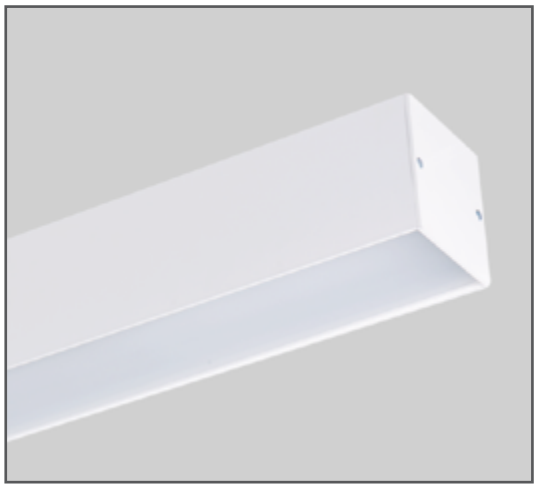

Applications

- Suspended luminaires for LED chips
- Body of aluminium extrude
- Cover finished with PMMA
- Luminaires are equipped with electronic driver
- Various types of suspension accessories-to be ordered separately
- IP20

Part No.	HN-U10
Input Voltage	AC220-240
LED Power	15W
Color Temperature	3000K
CRI	>80

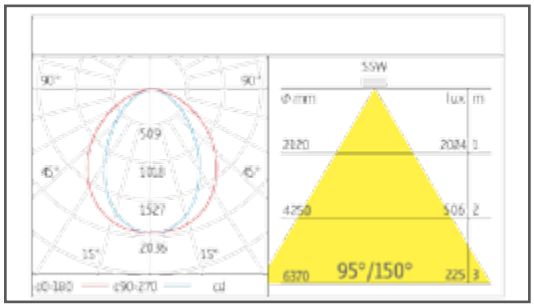

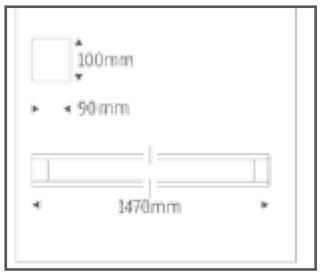

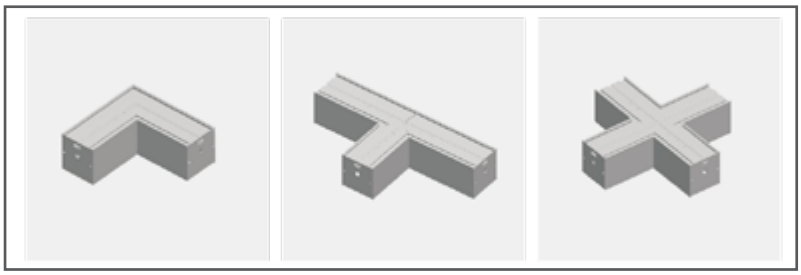

- Option 1 L Corner
- Option 2 T Corner
- Option 3 Cross Corner

MERKUR Precara-System

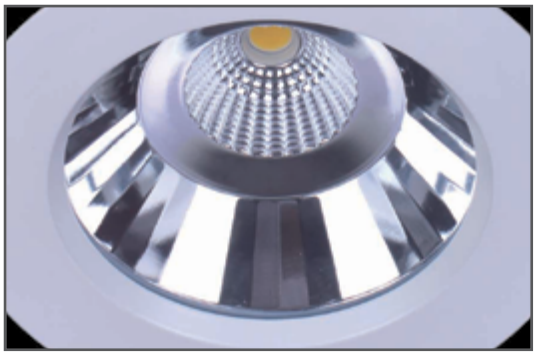

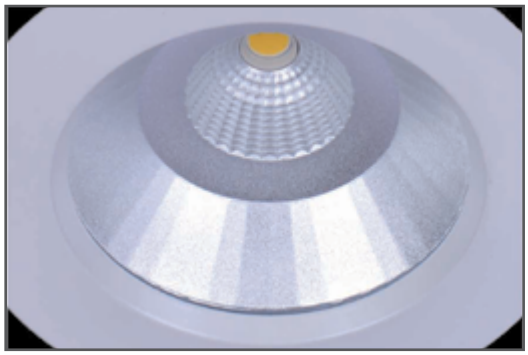

Applications

- Sophisticated technology and design
- Round and square luminaires
- Cooling element and cover plate or ring made of powder-coated die-cast aluminium
- Low recess depths: Mini HE 79/82mm, Medi HE 89/92mm, Max HE 108/111 mm
- Three different sizes: Mini Ø 140mm, Medi Ø 180mm, Maxi Ø 230mm
- Type of protection: IP 65 or IP 20
- IP65: LED cover made of single layer safety glass
- IP65 rating also on the rear of the luminaire. Hence optimum protection against dirt and moisture
- Unique four-segment reflector technology with light mixing chamber allows for harmonious lighting and optimum glare reduction with high LOR
- Energy savings of uo to 64% compared with TC downlights with electronic ballast
- UGR between 18 and 22
- Passive cooling
- Four different luminous flux values:

  Mini >1000lm + 2000lm,
  Medi >2000lm + 3000lm
  Maxi >3000lm + 4000lm
- Light colours: 5000K, 4000K and 3000K
- Standard CRL: 82, optionally available CRI:92
- life span: 50000 hours / L80, B10 (after 5.000 hrs the LED reach 80% of the rated luminous flux, 10% of the LED do not reach the 80%)
- Low colour tolerances 3 x MacAdam
- Round ceiling cutout also for square luminaires
- Easy to mount thanks to tool-free spring fastening system
- Application domains: offices,corridors, representative spaces,lobbies, conference rooms,exhibition and shopping facilities, projectng roofs, commercial kitchens,washrooms in sports facilities.

Precara-System, normal beam

Round Recessed Downlights
IP20/65 normal beam

- Protection class of the luminaire: III
- Ceiling thickness:1-20 mm
- Housing: aluminium profile designed as heat sink
- Bezel ring: die cast aluminium, powder coated
- Facetted aluminium reflector high gloss, with high gloss light mixing chamber
- Spring fastening system
- LED included
- 3 colours: black, white, grey

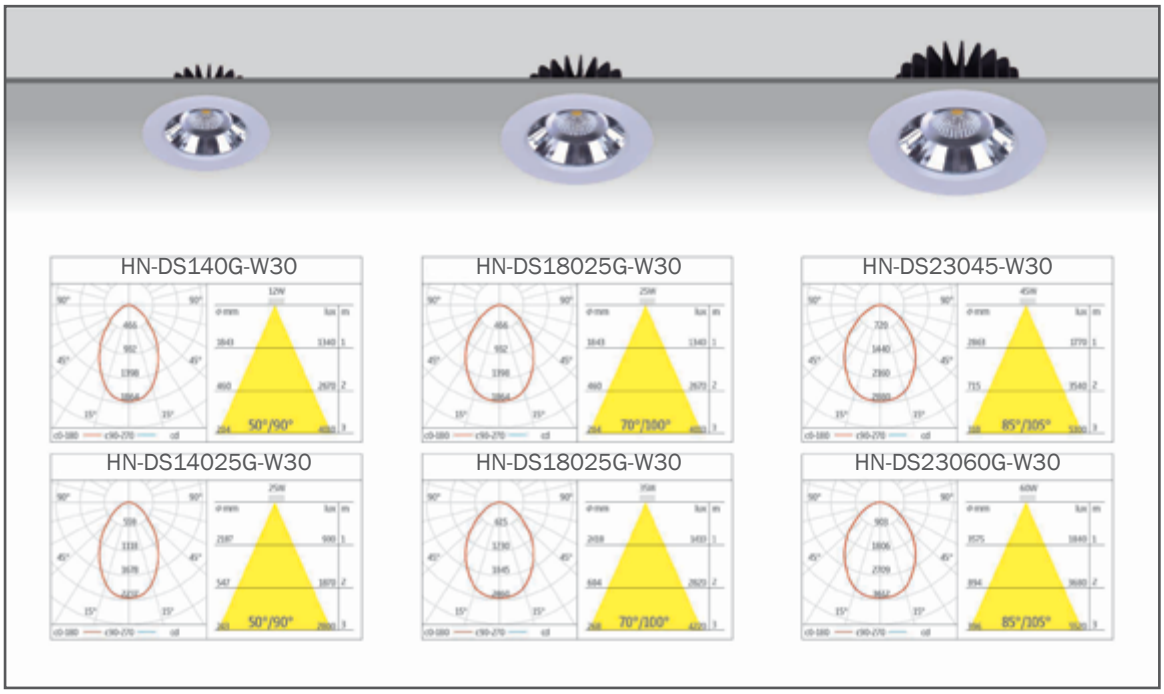

Precara-System, round, normal beam

Name	Power/m	Voltage/V	DC/mA	CRI	Beam Angle	3000 K Lumen/Lm	4000 K Lumen/Lm	5000 K Lumen/Lm
HN-DS14025G	25	220 - 240	600	80	50/90	1930	1980	2050
HN-DS14035G	35	220 - 240	850	80	70/100	3060	3120	3190
HN-DS14060G	60	220 - 240	1400	80	85/105	5020	5160	5310

Min

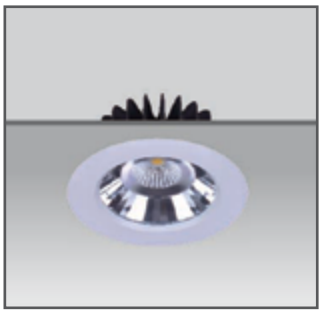

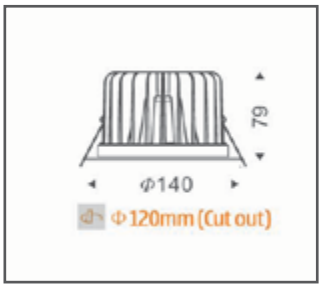

Medium

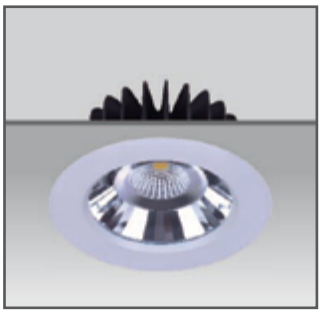

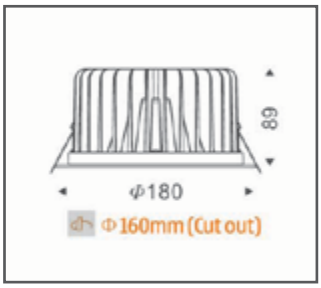

Max

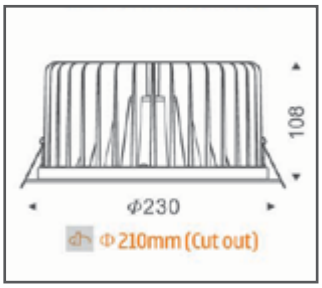

Precara-System, square, normal beam

Name	Power/m	Voltage/V	DC/mA	CRI	Beam Angle	3000 K Lumen/Lm	4000 K Lumen/Lm	5000 K Lumen/Lm
HN-DS14012GS	12	220 - 240	250	80	50/90	1040	1070	1100
HN-DS14025GS	25	220 - 240	600	80	70/100	2030	2080	2150
HN-DS14045GS	45	220 - 240	1000	80	85/105	4050	4130	4210

Min

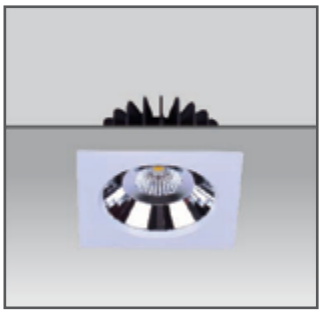

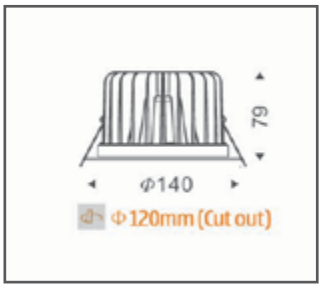

Medium

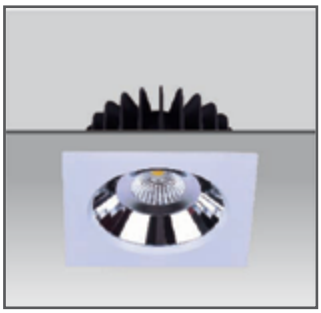

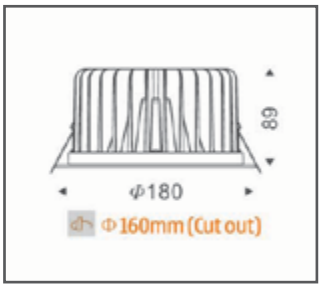

Max

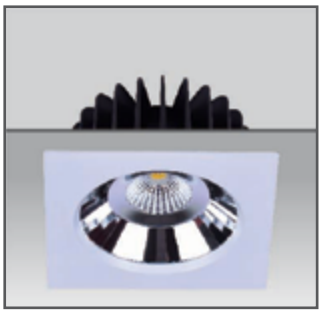

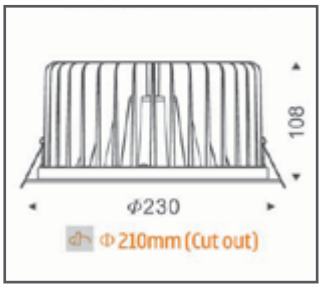

Precara-System, wide beam

Recessed downlights

IP20/65 wide beam

- Protection class of the luminaire: III
- Ceiling thickness:1-20 mm
- Housing: aluminium profile designed as heat sink
- Bezel ring: die cast aluminium, powder coated.
- LED diffuser made of safety glass.Facetted aluminium reflector satin-matt,with high gloss light mixing chamber.
- Spring fastening system.
- LED included.

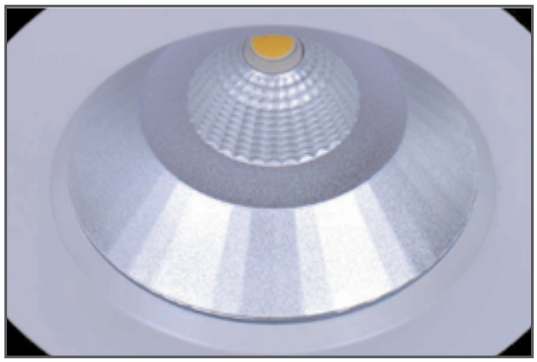

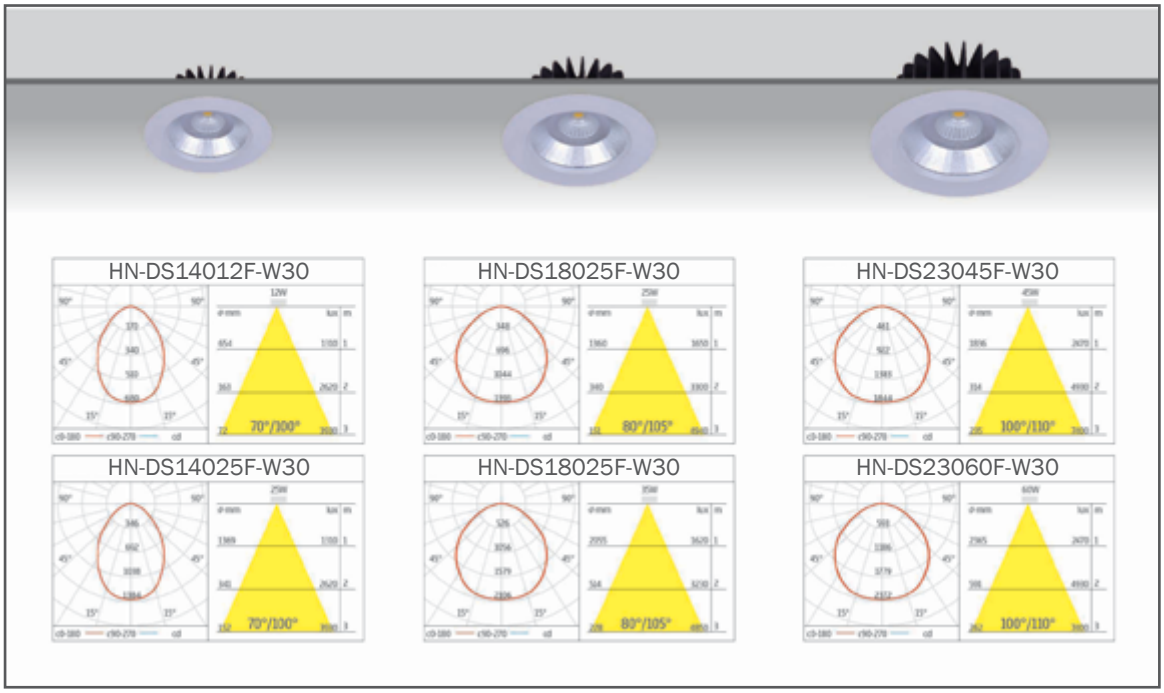

Precara-System, round, wide beam

Name	Power/m	Voltage/V	DC/mA	CRI	Beam Angle	3000 K Lumen/Lm	4000 K Lumen/Lm	5000 K Lumen/Lm
HN-DS14012F	12	220 - 240	250	80	70/100	900	930	970
HN-DS14025F	25	220 - 240	600	80	80/105	1900	1950	2000
HN-DS14045F	45	220 - 240	1000	80	100/110	3550	3545	3740

Min

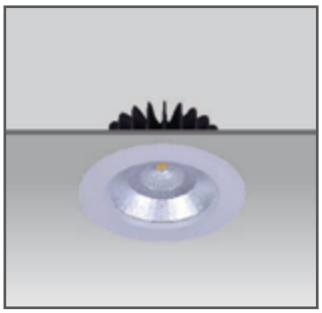

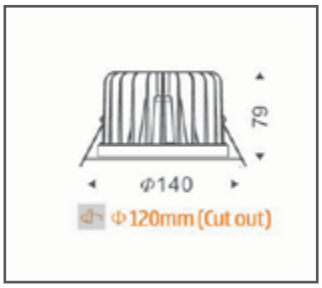

Medium

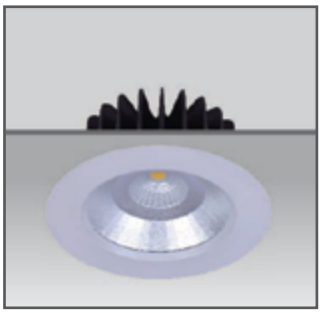

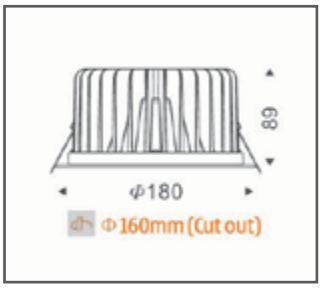

Max

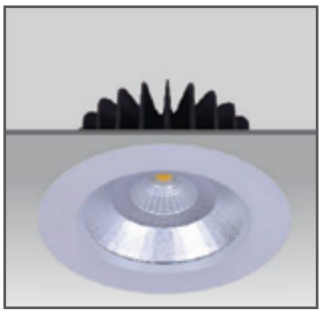

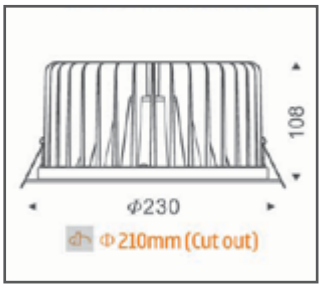

Precara-System, square, wide beam

Name	Power/m	Voltage/V	DC/mA	CRI	Beam Angle	3000 K Lumen/Lm	4000 K Lumen/Lm	5000 K Lumen/Lm
HN-DS23025FS	25	220 - 240	600	80	70/100	1800	1870	1930
HN-DS23035FS	35	220 - 240	850	80	80/105	2820	2870	2980
HN-DS23060FS	60	220 - 240	1400	80	100/110	4500	4670	4800

Min

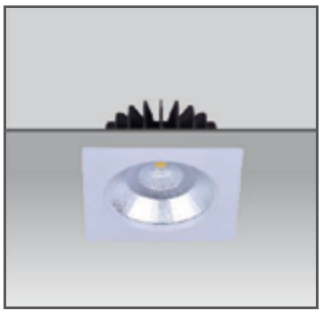

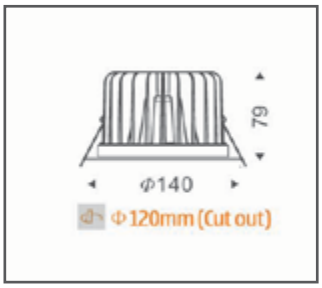

Medium

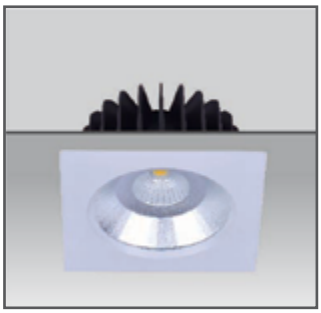

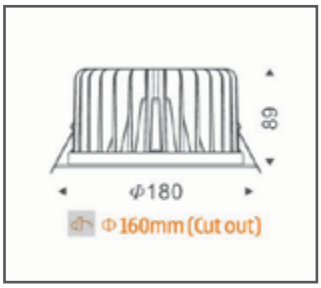

Max

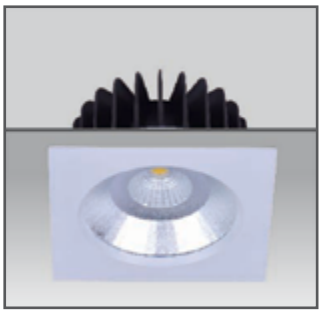

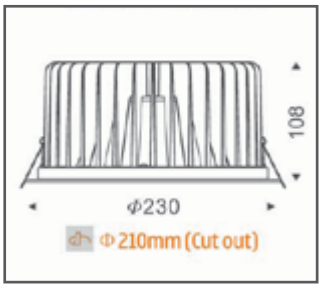

MERKUR Vintage-System

Applications

- True retrofit replacement of 50W/75W MR16 Halogen & GU10 50W spotlights
- High efficiency faceted aluminium reflector to provide excellent visual comfort and same sparkling effect as typical for halogen spot lights
- Heat sink made up from die cast aluminium to provide passive cooling
- Dimmable electronic driver suitable for dim ming with universal / leading edge / trailing edge / C-bus dimming system
- No need for halogen electronic transformer with this module

Name	Power m	Voltage V	DC mA	CRI	Beam Angle	3000 K Hot Lumen/Lm	3000 K Lm/w	4000 K Hot Lumen/Lm	4000 K Lm/w	5000 K Hot Lumen/Lm	4000 K Lm/w
HN-DS507-8W	8	220 - 240	180	80	40/80	560	70	590	74	610	76
HN-DS507-10W	10	220 - 240	200	80	40/80	620	62	650	65	680	68
HN-DS507-12W	12	220 - 240	250	80	40/80	750	63	770	64	800	67
HN-DS512-12W	12	220 - 240	250	80	40/80	870	73	900	75	940	78
HN-DS507H-8W	8	220 - 240	180	90	40/80	430	54	460	49	-	-
HN-DS507H-10W	10	220 - 240	200	90	40/80	460	46	490	49	-	-
HN-DS507H12W	12	220 - 240	250	90	40/80	560	47	580	48	-	-
HN-DS512H-12W	12	220 - 240	250	90	40/80	680	57	710	59	-	-

MERKUR Vintage-System

Super Narrow Reflector 1
High efficiency PC reflector
AL anodized specular silver valley
Angle: 15°

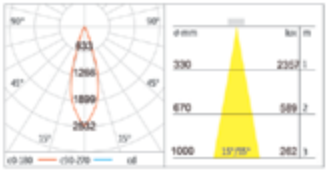

Super Narrow Reflector 2
High efficiency PC reflector
AL anodized specular silver valley
Angle: 28°

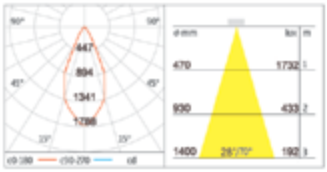

Medium Flood Reflector 3
High efficiency PC reflector
AL anodized specular silver valley with Embossing
Angle: 40°

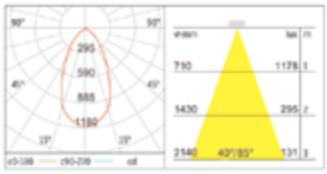

Flood Reflector 4
High efficiency PC reflector
AL anodized specular silver valley with Embossing
Angle: 60°

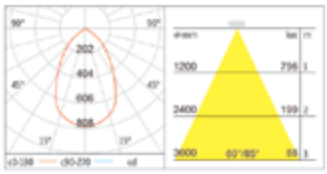

Narrow Lens 1
High efficiency PMMA Lens
AL anodized specular silver valley
Angle: 25°

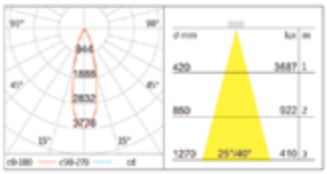

Medium Flood Lens 2
High efficiency PMMA Lens
AL anodized specular silver valley with Embossing
Angle: 40°

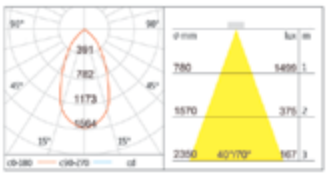

Flood Lens 3
High efficiency PMMA Lens
AL anodized specular silver valley with Embossing
Angle: 60°

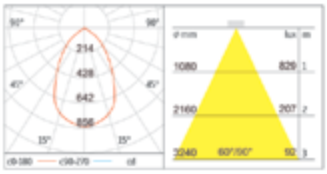

MERKUR Vintage-System

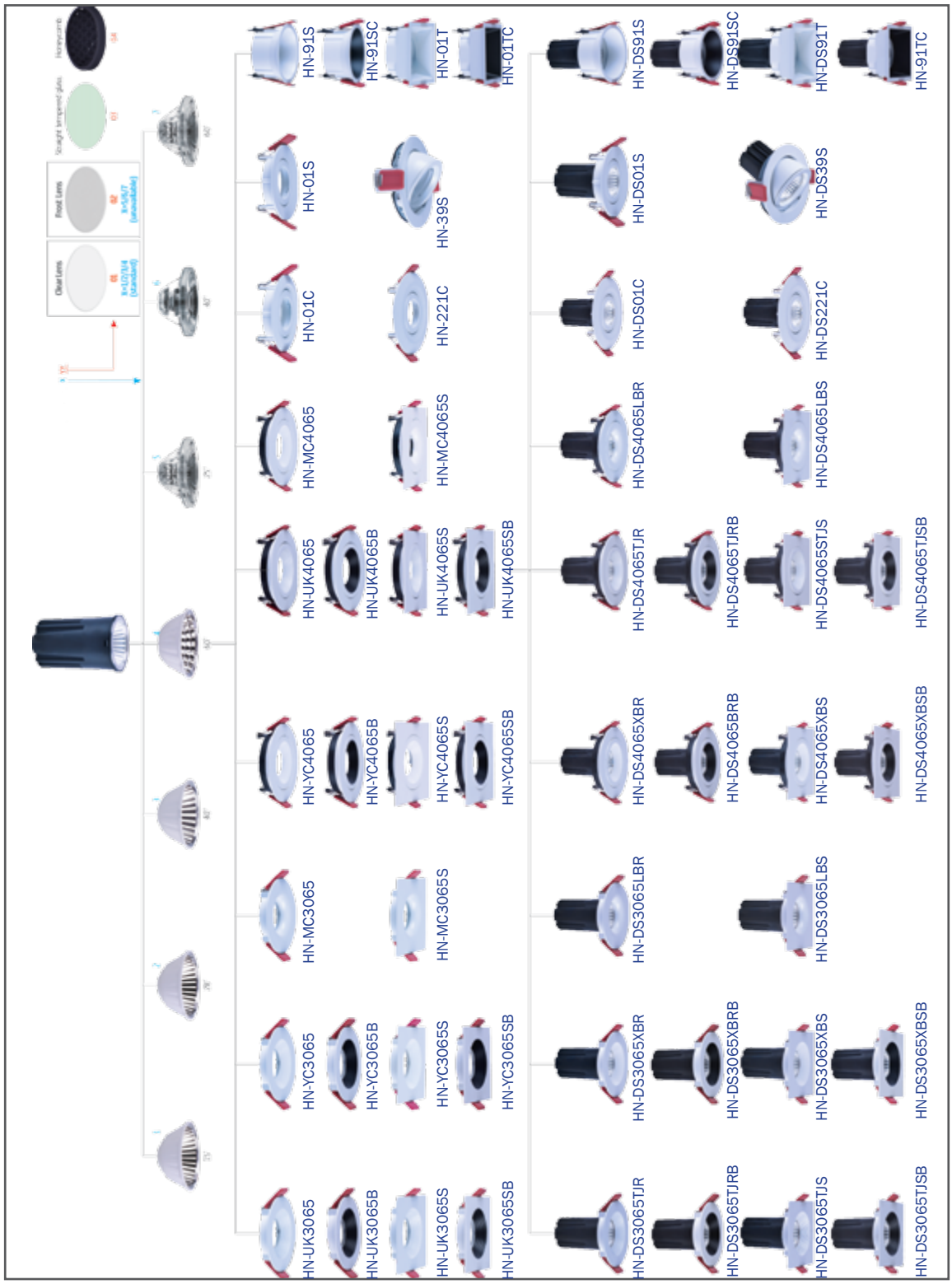

DUPROLUX®
LIGHTING

www.merkur-hamburg.de

MERKUR Panel Light Firenze

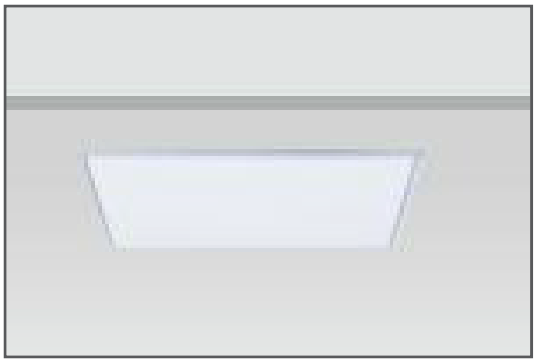

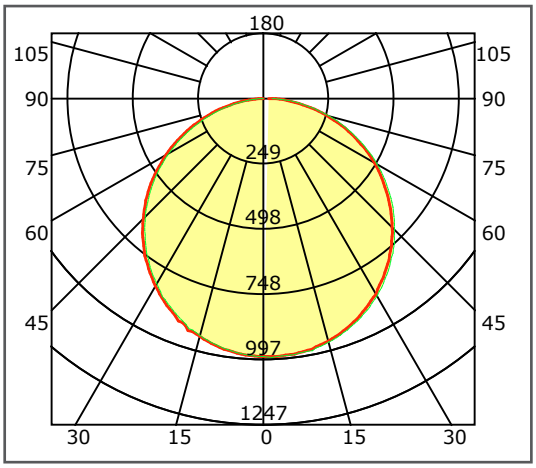

LED Panel light 39 W

- Voltage: 230.0 V
- Current: 0.176 A
- Power: 38.50 W
- CIE Class: Direct
- Total Rated Lamp Lumens: 2945.4 lm
- Measurement Flux: 2945.4 lm
- Efficiency: 100%
- Downward Ratio: 100%, Upward Ratio: 0%
- Field Angle: H165.7 V165.2
- Beam Angle: H115.8 V115.5
- Luminaire Efficacy Rating (LER): 77
- Central Intensity: 986.45 cd
- Max. Intensity: 989.56 cd
- Pos of Max. Intensity: H90 V2

Illuminance at a distance

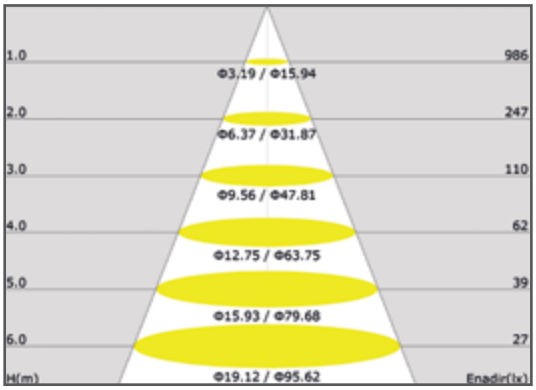

LED-Drivers, superior series

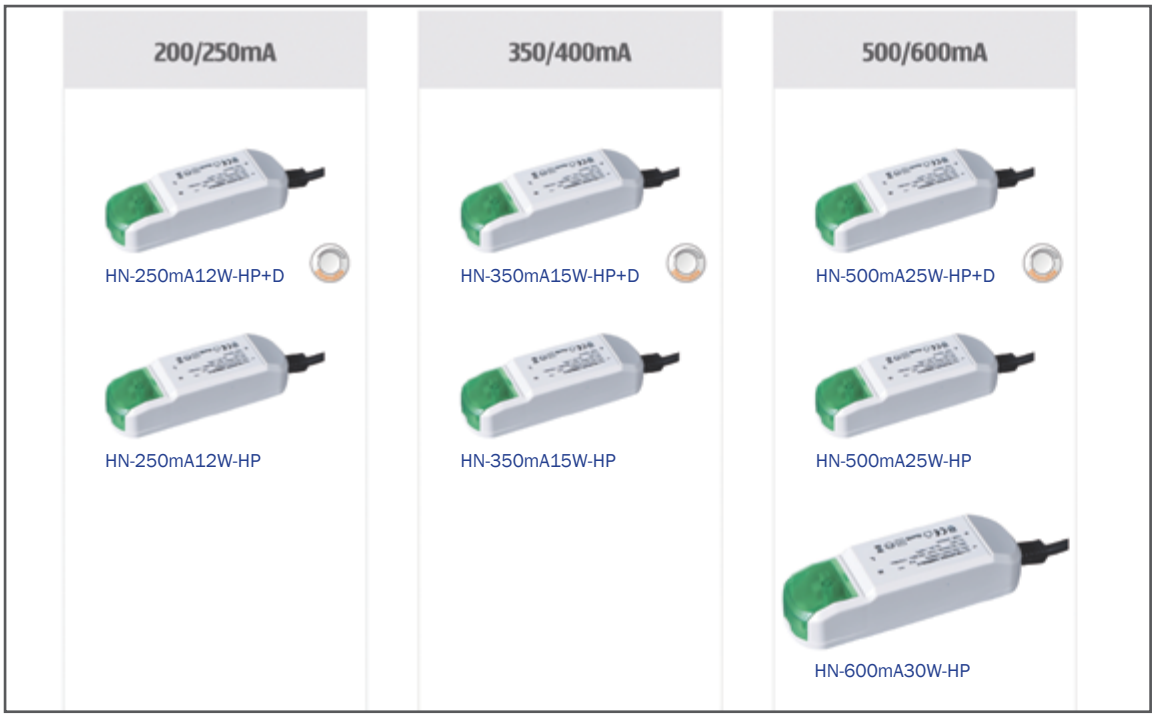

Name	Input Voltage V	Max Output (w)	Output Curren (mA)	Output Voltage V	Power Factor (c)	Efficiency (%)	Dimensions LxWxH (mm)
HN-250mA12W-HP+D	220 - 240	12	250	52	0.9	80	126 x 39 x 31
HN-250mA12W-HP	1000 - 240	12	250	52	0.9	80	126 x 39 x 31
HN-350mA15W-HP+D	220 - 240	15	350	56	0.9	85	126 x 39 x 31
HN-350mA15W-HP	100 - 240	15	350	43	0.9	85	126 x 39 x 31
HN-500mA25W-HP+D	220 - 240	25	500	43	0.9	85	126 x 39 x 31
HN-500mA25W-HP	100 - 240	25	500	52	0.9	85	126 x 39 x 31
HN-600mA30W-HP	100 - 240	30	600	40	0.9	85	126 x 39 x 31

LED-Drivers, superiore series

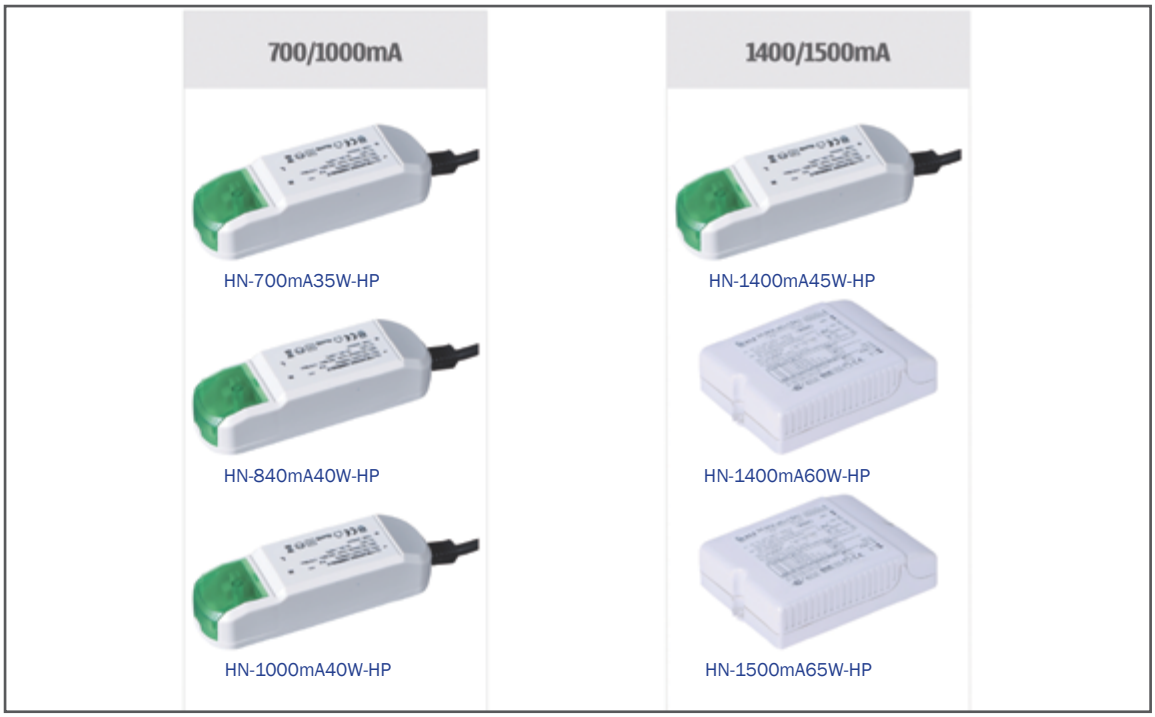

Name	Input Voltage V	Max Output (w)	Output Curren (mA)	Output Voltage V	Power Factor (c)	Efficiency (%)	Dimensions LxWxH (mm)
HN-700mA35W-HP	100 - 240	35	700	40	0.95	80	150 x 45 x 31
HN-840mA40W-HP	100 - 240	40	840	40	0.95	80	150 x 45 x 31
HN-1000MA40W-HP	100 - 240	40	1000	41	0.95	85	150 x 45 x 31
HN-1400mA45W-HP	100 - 240	45	1000	37	0.95	85	122 x 90 x 33
HN-1400mA60W-HP	100 - 240	60	1400	39	0.95	85	122 x 90 x 33
HN-1500mA65W-HP	100 - 240	65	1500	40	0.95	85	122 x 90 x 33

MERKUR Ueberseehandel GmbH

Headquarter Germany

Mattentwiete 5
20457 Hamburg
Germany

+49 - 40 32 08 27 3
+49 - 40 32 08 27 59

mail@merkur-hamburg.de

Office United Arab Emirates

Level 41, Emirates Towers
Sheikh Zayed Road
P.O. Box: 31 303
Dubai - U.A.E.

+971 - 43 13 28 92
+971 - 43 13 27 53

Office Hongkong

Unit 1202, Level 12,
One Peking Building
1 Peking Road, Tsim Sha Tsui
Hongkong

+852 - 39 80 92 25
+852 - 39 80 92 34

Distributors

Afghanistan

Liberty Corporation Co.
64m Street, Herat City
Afghanistan
+937 - 99 69 44 81

Bahrain

Shaheen Group
P.O.Box 405
Manama
Kingdom of Bahrain
+973 -17 81 35 35z

Cameroon

CALICO Sarl
BP 15566
Douala
Cameroon
+237- 22 43 80 44

Ghana

Luminant Electricals
P.O. Box CT5204
Cantonment-Accra
Ghana
+233 - 27 52 29 62 2

Lebanon

Tele Project
P.O. Box 55268
Sin el Fil
Lebanon
+961 - 16 87 900

Oman

Trade Links and Services Co. LLC
P.O.Box 2901
Ruwi 112
Sultanate of Oman
+968 - 24 70 67 75

Saudi Arabia

Ahmed Omer Bagazy Est.
P.O. Box 16367
Jeddah 21464
Saudi Arabia
+966 - 26 47 29 28

Sri Lanka

Rotax Limited
332 Galle Road
Colombo 04
Sri Lanka
+94 - 11 55 74 07 0

United Arab Emirates

Gilco Trading LLC
P.O. Box 4916
Deira, Dubai
United Arab Emirates
+971 - 43 96 15 25

Yemen

Al Ashwal for Elecrical Trade & Agencies
Shoub Street
Sana'a
Yemen Republic
+967 - 12 82 43 2

MERKUR®
GERMAN TECHNOLOGY